Vertical Recommendation for Use sheets (RfUs)

of the European Coordination of Notified Bodies in the field of PPE

Directive 89/686/EEC

Vertical Group 1 - status in November 2015

Vertical Group 2 - status in November 2017

Vertical Group 3 - status in August 2016

Vertical Group 4 - status in November 2015

Vertical Group 5 - status in December 2012

Vertical Group 7 - status in December 2012

Vertical Group 8 - status in November 2017

Vertical Group 9 - status in July 2018

Vertical Group 10 - status in July 2018

Vertical Group 11 - status in November 2015

Vertical Recommendation for Use sheets (RfUs)
of Vertical Group 1 "Head Protection"
of the European Coordination of Notified Bodies in the field of PPE

No.	Version	Reference	Key words	Approved by Vertical Group 1	Approved by Horizontal Committee	Approved by PPE Expert Group
01.001	02	EN 397:1995 (+A1) & EN 397:2012, Clause 6.11.2	Industrial helmet, lateral deformation test, test procedure	18/04/2012	12/12/2012	12/03/2013
01.002	04	EN 812:2012	Industrial bump caps, ventilation	18/07/2014	30/12/2014	19/09/2015
01.003	04	Various	Shock absorption, falling headform, alignment, procedure	08/05/2014	30/12/2014	19/09/2015
01.004	02	EN 1384:1996, EN 1384:2012	Helmets for equestrian activities, peak, deflection	22/04/2013	30/12/2014	19/09/2015
01.005	00	General	Helmet sizing	31/05/2010	15/06/2011	15/05/2012
01.006	04	Various	Kerbstone anvil	08/05/2014	30/12/2014	19/09/2015
01.007	00	All	Test method standards	31/05/2010	15/06/2011	15/11/2012
01.008	00	EN 443:2008, Clause 5.7	Retention system effectiveness, Pre-requisites	31/05/2010	15/06/2011	15/11/2012
01.009	00	EN 443:2008, Clause 5.4, 5.5	Shock absorption, Resistance to penetration	31/05/2010	15/06/2011	15/11/2012
01.011	01	EN 397:1995 & 2012, Clause 6.1.4	Chin strap anchorage	18/04/2012	12/12/2012	12/03/2013
01.012	01	Various	Secondary impacts	18/04/2012	12/12/2012	12/03/2013
01.013	01	En 1078:1997 & 2012, Clause 4.6.3	Retention system, Fastening device	18/04/2012	12/12/2012	12/03/2013
01.014	01	Various	Penetration test block, radius	18/04/2012	12/12/2012	12/03/2013
01.015	02	EN 1077:2007, clause 5.4	Test area	08/05/2014	30/12/2014	19/09/2015
01.016	03	EN 397:1995 & 2012, EN 812:1997 & 2012	Shock absorption, resistance to penetration, impact velocity	08/05/2014	30/12/2014	19/09/2015
01.017	01	EN 397:1995 & 2012, Clause 5.2.1	Very low temperature, pre-conditioning	18/04/2012	12/12/2012	12/03/2013
01.018	01	EN 397:1995 & 2012	Harness, internal vertical clearance	18/04/2012	12/12/2012	12/03/2013
01.019	01	EN 443:2008, Clause 4.11 Flame resistance	Helmets for fire fighting; flame resistance	18/04/2012	12/12/2012	12/03/2013
01.021	01	EN 397:2012 + A1:2012, clause 5.2.5	Molten metal splash, assessment	19/07/2013	30/12/2014	19/09/2015
01.022	01	Various	Test position, penetration testing, molten metal testing	22/04/2013	30/12/2014	19/09/2015

Vertical Recommendation for Use sheets (RfUs)
of Vertical Group 1 "Head Protection"
of the European Coordination of Notified Bodies in the field of PPE

No.	Version	Reference	Key words	Approved by Vertical Group 1	Approved by Horizontal Committee	Approved by PPE Expert Group
01.023	01	EN 12492:2012, clause 5.6	Penetration testing, sample restraint	22/04/2013	30/12/2014	19/09/2015
01.024	01	EN 397:2012 + A1:2012, EN 12492:2012	Dual-marking	22/04/2013	30/12/2014	19/09/2015
01.025	01	EN 397:2012 + A1:2012, clause 6.12.2	Molten metal test, orientation	19/07/2013	30/12/2014	19/09/2015
01.026	01	EN 397:2012 + A1:2012, clause 4.9	Ventilation, area measurement, covers	19/07/2013	30/12/2014	19/09/2015
01.027	01	EN 443:2008, clause 5.4.1	Shock absprption, headforms	19/07/2013	30/12/2014	19/09/2015
01.028	01	EN 443:2008, clause 5.8	Retention system strength, headforms	19/07/2013	30/12/2014	19/09/2015
01.029	01	EN 812:2012, clause 5.8	Marking	19/07/2013	30/12/2014	19/09/2015
01.030	01	EN 12492:2012, clause 4.1.4	Ventilation	19/07/2013	30/12/2014	19/09/2015
01.031	02	EN 1384:2012, clause 4.1	Thickness measurement, area of protection	08/05/2014	30/12/2014	19/09/2015
01.032	01	EN 1384:2012, clause 6.2	Test sequence, sample restoration	19/07/2013	30/12/2014	19/09/2015
01.033	01	EN 14052:2012 + A1:2012, clause 5.2.2	Resistance to penetration, helmet test support	19/07/2013	30/12/2014	19/09/2015
01.035	01	Various	Test headforms, helmet size	18/07/2014	30/12/2014	19/09/2015
01.036	01	EN 13484:2012, figure 2	Extent of coverage	18/07/2014	30/12/2014	19/09/2015
01.037	01	EN 1385:2012, clause 5.2 & figure 1	Coverage	18/07/2014	30/12/2014	19/09/2015
01.038	01	EN 1385:2012, clause 7.8 & figure 4	Retention system effectiveness	18/07/2014	30/12/2014	19/09/2015
01.039	01	EN 397:2012, clause 7.1 f)	Helmet shell, materials, marking	18/07/2014	30/12/2014	19/09/2015

Note: Recommendation for Use sheets which deal with withdrawn and / or superseded standards and which no longer apply to new certifications are published as reference for previous files.

	CO-ORDINATION OF NOTIFIED BODIES **PPE-Directive 89/686/EEC + amendments** **RECOMMENDATION FOR USE**	CNB/P/01.001 Revision 02 Language: E

Number of pages: 1	Date: *10 April 2012*	Approval by : Approved on :
Origin : VG 1		☒ Vertical Group *18/04/2012* ☒ Horizontal Committee *12/12/2012* ☒ Standing Committee *12/03/2013*

Question related to: Annex: Article:	EN/prEN: EN 397:1995 (+A1) & EN 397:2012 Clause: 6.11.2	Other:

Key words:

Industrial helmet, lateral deformation test, test procedure

Question:

In the case of helmets which include localized projections from the shell, e.g. rivets, is it permissible to use "bridging elements" so that the load is not applied directly to the projections?

Background: differing results in the lateral deformation test of one industrial helmet type had been reported for UTAC and BSI. Different location of the loading plates on the sides of the helmets turned out to be the reason for the discrepancy. Whereas UTAC located the loading plates directly on the shell, notwithstanding any localized projections such as rivets, BSI bridged the projections on the shell by means of wooden elements.

Solution:

No.

The test procedure in which the loading plates are located on the helmet itself (without any bridging elements) is the relevant one for the lateral deformation test. The formulation of chapter 6.11.2 in EN 397 does not allow any other interpretation.

Sent to: ☒ members of the VG ☐ other(s) VG ☒ HC (2) ☒ TC (3) ☒ SC (4) ☐ other (5)

(5)

(1) Essential safety requirement
(2) HC = horizontal committee
(3) N° of CEN/TC (Secretary & Chairman)
(4) EEC Standing Committee 89/392
(5) To be specified

	CO-ORDINATION OF NOTIFIED BODIES **PPE-Directive 89/686/EEC + amendments** **RECOMMENDATION FOR USE**	CNB/P/01.002 Revision 04 Language: E

Number of pages: 1	Date: *9 June 2014*	Approval by : Approved on :
Origin : VG 1		☒ Vertical Group 18/07/2014 ☒ Horizontal Committee 30/12/2014 ☒ Standing Committee 19/09/2015

Question related to: Annex: Article:	EN/prEN: EN 812:2012 Clause: 4.7	Other:

Key words:

Industrial bump caps, ventilation

Question:

Products may be designed with ‘cut-outs’ that extend upwards from the lower edge of the shell, such as those found at the rear of a bump cap designed with the appearance of a baseball cap or those designed to permit flexing of the shell for comfort or to accommodate different head sizes.

Should such cut-out features be considered as holes for ventilation purposes?

Solution:

No.

Sent to: ☒ members of the VG ☐ other(s) VG ☒ HC (2) ☒ TC (3) ☒ SC (4) ☐ other (5)

(5)

(1) Essential safety requirement
(2) HC = horizontal committee
(3) N° of CEN/TC (Secretary & Chairman)
(4) EEC Standing Committee 89/392
(5) To be specified

	CO-ORDINATION OF NOTIFIED BODIES **PPE-Directive 89/686/EEC + amendments** **RECOMMENDATION FOR USE**	CNB/P/01.003 Revision 04 Language: E

Number of pages: 2	Date: *07/05/14*	Approval by : Approved on :
Origin : VG 1		☒ Vertical Group 08/05/2014 ☒ Horizontal Committee 30/12/2014 ☒ Standing Committee 19/09/2015

Question related to: Annex: Article:	EN/prEN: Various Clause:	Other:

Key words:

Shock absorption, falling headform, alignment, procedure

Question:

What is the correct positioning procedure of the helmeted headform for falling headform shock absorption testing?

The following standards are affected:

EN 966 : 1996 (+A1/A2) & EN 966 : 2012	*clause 7.2.3*
EN 1077 : 2007	*clause 5.5 (refers to EN 13087-2 : 2000 cl. 5.3)*
EN 1078 : 1997 (+A1) & EN 1078 : 2012	*clause 5.4*
EN 1080 : 1997 (+A1) & EN 1080 : 2013	*clause 5.4*
EN 1384 : 1996 (+A1) & EN 1384 : 2012	*clause 6.4*
EN 1385 : 1998 (+A1) & EN 1385 : 2012	*clause 7.6*
EN 13087-2 : 2000 (+A1) & EN 13087-2 : 2012	*clause 5.3*
EN 13484 : 2001 & EN 13484 : 2012	*clause 5.7*
EN 13781 : 2001 & EN 13781 : 2012	*clause 5.4*

(1) Essential safety requirement
(2) HC = horizontal committee
(3) N° of CEN/TC (Secretary & Chairman)
(4) EEC Standing Committee 89/392
(5) To be specified

Solution:

Align the target impact point with the centre of the anvil and rotate the headform so that the centre of gravity of the headform, target impact point and anvil centre all lie on the same vertical axis.

Ideally, positioning should also place the line tangential to the external surface of the helmet at the target impact point, parallel to the anvil surface. However, if this cannot also be achieved, then priority shall be given to the alignment between headform centre of gravity, target point and anvil centre.

In circumstances when a tangential impact cannot be achieved, it is accepted that this may lead to the target impact point not being the first point of impact. This is acceptable so long as the first point of contact with the anvil is not so close to the edge of the anvil as to affect the test.

Considerations:

The various standards include various and differing statements regarding positioning:

"the system shall comprise……a system by which the point of impact can be brought into correspondence with the centre of the anvil." (e.g. EN966, EN1078, EN1080, EN1385)

"The impacts shall be directed towards the centre of gravity of the headform." (e.g. EN1077)

"shall comprise….a system to align the impact site with the centre of the anvil." (e.g. EN1384)

"The test headform shall be so positioned that the designated point on the helmet is vertically above the centre of the anvil. The plane tangential to the point of impact shall be horizontal." (e.g. EN13781)

Some of the standards include more than one of these statements, whilst some do not describe the positioning.

If the headform CoG is not aligned with the target impact point and the centre of the anvil, rotation will occur which may affect results. If the target point of impact is not tangential with the anvil and is not the first point of contact, this will also induce rotation which again may affect results. VG1 considers that the effect of rotation caused by misalignment of the CoG is more critical and therefore alignment of the CoG should be prioritised.

Sent to: ☒ members of the VG ☐ other(s) VG ☒ HC (2) ☒ TC (3) ☒ SC (4) ☐ other (5)

(5)

	CO-ORDINATION OF NOTIFIED BODIES **PPE-Directive 89/686/EEC + amendments** **RECOMMENDATION FOR USE**	CNB/P/01.004 Revision 02 Language: E

Number of pages: 1	Date: 2012-04-10	Approval by : Approved on : ☒ Vertical Group .....2013-04-22 ☒ Horizontal Committee.....2014-12-30 ☒ Standing Committee.....2015-09-19
Origin: VG1		

Question related to: Annex: Article:	EN/prEN: EN 1384:1996 & EN1384:2012 Clause:	Other:

Key words: Helmets for equestrian activities, peak, deflection

Question:

For the purpose of testing peak deflection, what should be considered a peak, because the definitions given are not clear?

This sheet relates to the following standards:

EN 1384:1996 (+A1) & EN 1384 : 2012 clauses 3.10, 5.5 & 6.8

Solution:

Limited protection to the eyes may be provided by an extension forward from the that part of the helmet which covers the head directly from above. Depending upon the construction of the helmet, such an extension may be considered to be, or not to be, a peak. It may be integral with, or detachable by the wearer from, the helmet.

In the case of helmets whose construction incorporates a shell fitted with protective padding, the extension is considered to be a peak if it is not made from the same material as the protective padding (that is, it is made from the same material of the shell). If the extension is made from the same material as the protective padding, it is considered not to be a peak.

In the case of helmets whose construction does not incorporate a shell (that is the helmet is predominantly made from shock absorbing material), the extension is considered not to be a peak if it is integral with the part of the helmet which covers the head directly from above.

Sent to: ☒ members of the VG ☐ other(s) VG ☒ HC (2) ☒ TC (3) ☒ SC (4) ☐ other (5)

(3): TC158 (5):

(1) Essential safety requirement
(2) HC = horizontal committee
(3) N° of CEN/TC (Secretary & Chairman)
(4) EEC Standing Committee 89/392
(5) To be specified

	CO-ORDINATION OF NOTIFIED BODIES **PPE-Directive 89/686/EEC + amendments** **RECOMMENDATION FOR USE**	CNB/P/01.005 Revision 00 Language: E

Number of pages : 1	Date : 27 April 2010	Approval by :	Approved on :
Origin : VG1		☑ Vertical Group ..... ☑ Horizontal Committee ..... ☑ Standing Committee	.....31/05/2010 .....15/06/2011 .....15/05/2012

Question related to: General		EN/prEN :	Other:
Annex:	Article:	Clause :	

Key words : Helmet sizing

Question:

During certification a manufacturer submits helmets, declaring size ranges. Which actions should the Notified Body/Test Laboratory take in relation to the declared size ranges?

(Note, this document is based upon R2003_1 issued 28/03/03)

Solution:

If a manufacturer submits a helmet for certification, declaring the size or size range of the helmet, the Notified Body/Test Laboratory should check that declared sizes are correct.

The test report should state the tested sizes or size range, and the certificate should clearly state the approved sizes or size range in centimetres.

Marking of the helmet with sizes not covered by the certification should not be allowed.

Sent to: ☒ members of the VG ☐ other(s) VG ☒ HC (2) ☐ TC (3) ☒ SC (4) ☐ other (5) (5)

(1) Essential safety requirement
(2) HC = horizontal committee
(3) N° of CEN/TC (Secretary & Chairman)
(4) EEC Standing Committee 89/392
(5) To be specified

	CO-ORDINATION OF NOTIFIED BODIES **PPE-Directive 89/686/EEC + amendments** **RECOMMENDATION FOR USE**	CNB/P/01.006 Revision 04 Language: E

Number of pages: 1	Date: *7 May 2014*	Approval by : Approved on :
Origin : VG 1		☒ Vertical Group 08/05/2014 ☒ Horizontal Committee 30/12/2014 ☒ Standing Committee 19/09/2015

Question related to: Annex: Article:	EN/prEN: Various Clause:	Other:

Key words:

Kerbstone anvil

Question:

How shall a test be performed using the kerbstone anvil?

The following standards are affected:

EN 966 : 1996 (+A1/A2) & EN 966 : 2012	*clause 7.2.3*
EN 1077 : 2007	*clause 5.5 (refers to EN 13087-2 : 2000 cl. 5.3)*
EN 1078 : 1997 (+A1) & EN 1078 : 2012	*clause 5.4*
EN 1080 : 1997 (+A1) & EN 1080 :2013	*clause 5.4*
EN 13087-2 : 2000 (+A1) & EN 13087-2 : 2012	*clause 5.3*
EN 13781 : 2001 & EN 13781 : 2012	*clause 5.4*

Solution:

The kerbstone anvil simulates the pavement edge; this means it has to be considered of endless length.

For practical and technical reasons these anvils have a limited length as specified in the standards.

Test shall be performed in such a way that the edges of the anvil, as far as possible, do not affect the results (for example by directly contacting, during positioning, the headform).

Sent to: ☒ members of the VG ☐ other(s) VG ☒ HC (2) ☒ TC (3) ☒ SC (4) ☐ other (5)

(5)

(1) Essential safety requirement
(2) HC = horizontal committee
(3) N° of CEN/TC (Secretary & Chairman)
(4) EEC Standing Committee 89/392
(5) To be specified

	CO-ORDINATION OF NOTIFIED BODIES **PPE-Directive 89/686/EEC + amendments** **RECOMMENDATION FOR USE**	CNB/P/01.007 Revision 00 Language: E

Number of pages : 1	Date : 27 April 2010	Approval by :	Approved on :
Origin : VG1		☑ Vertical Group ..... ☑ Horizontal Committee ..... ☑ Standing Committee	.....31/05/2010 .....15/06/2011 .....15/11/2012

Question related to:		EN/prEN : All	Other:
Annex:	Article:	Clause :	

Key words : Test method standards

Question:

If a specific product standard does not cover all test specifications and possible interpretations and there is no direct reference to test method standards (EN13087 series) how should the Test Laboratory proceed in performing tests and verification?

(Note, this document is based upon R2007_1 issued 23/11/07)

Recommended solution:

When test method is not fully described or clarified in the appropriate specific product standard and no reference to the test method standards are in the specific one, the Test Laboratory should refer to the existing appropriate test method standards (i.e. EN13087 series) to conduct tests.

However, if there is a difference between the procedure/equipment in the product standard and that in the test method standard, the method from the product standard shall take precedent.

Test Laboratories are encouraged to highlight individual situations in which information is missing from the product standard so that a separate Recommendation for Use sheet can be raised for each occurrence.

Sent to: ☒ members of the VG ☐ other(s) VG ☒ HC (2) ☒ TC (3) ☒ SC (4) ☐ other (5) (5)

(1) Essential safety requirement
(2) HC = horizontal committee
(3) N° of CEN/TC (Secretary & Chairman)
(4) EEC Standing Committee 89/392
(5) To be specified

	CO-ORDINATION OF NOTIFIED BODIES **PPE-Directive 89/686/EEC + amendments** **RECOMMENDATION FOR USE**	CNB/P/01.008 Revision 00 Language: E

Number of pages : 1	Date : 13 May 2009	Approval by :	Approved on :
Origin :		☑ Vertical Group	.....31/05/2010
		☑ Horizontal Committee	.....15/06/2011
		☑ Standing Committee	.....15/11/2012

Question related to :		EN/prEN : EN 443 : 2008	Other :
Annex :	Article :	Clause : 5.7	

Key words :

Retention system effectiveness, Pre-requisites

Question :

EN 13087-5 : 2000 clause 4 point f) requires the performance standard to specify the "direction of application of the force". EN 443 : 2008 clause 5.7 does not do this, so how shall the force be applied?

Recommended solution :

The force shall be applied both to the front and rear in two separate tests, although the order is not critical.

The single sample specified by EN 443 : 2008 table B.1. shall be used for both tests.

The single sample must satisfy the requirements for both the front and rear tests in order that the model be considered acceptable.

Sent to: ☒ members of the VG ☐ other(s) VG ☒ HC (2) ☒ TC (3) ☒ SC (4) ☐ other (5) (5)

(1) Essential safety requirement
(2) HC = horizontal committee
(3) N° of CEN/TC (Secretary & Chairman)
(4) EEC Standing Committee 89/392
(5) To be specified

	CO-ORDINATION OF NOTIFIED BODIES **PPE-Directive 89/686/EEC + amendments** **RECOMMENDATION FOR USE**	CNB/P/01.009 Revision 00 Language: E

Number of pages : 1	Date : 13 May 2009	Approval by :	Approved on :
Origin : VG1		☑ Vertical Group	.....31/05/2010
		☑ Horizontal Committee	.....15/06/2011
		☑ Standing Committee	.....15/11/2012

Question related to :		EN/prEN : EN 443 : 2008	Other :
Annex :	Article :	Clause : 5.4, 5.5	

Key words :

Shock absorption, Resistance to penetration

Question :

In the case of helmets fitted or supplied with face protectors that are covered by the definitions of clause 3.18 "integral additional protective function" or clause 3.19 "non-integral protective functions", how should the face protector be positioned when testing to clause 4.2 "Shock absorption" or 4.3 "Resistance to penetration"?

Recommended solution :

The face protector shall be placed in its "in-use" position.

Sent to: ☒ members of the VG ☐ other(s) VG ☒ HC (2) ☒ TC (3) ☒ SC (4) ☐ other (5) (5)

(1) Essential safety requirement
(2) HC = horizontal committee
(3) N° of CEN/TC (Secretary & Chairman)
(4) EEC Standing Committee 89/392
(5) To be specified

	CO-ORDINATION OF NOTIFIED BODIES **PPE-Directive 89/686/EEC + amendments** **RECOMMENDATION FOR USE**	CNB/P/01.011 Revision 01 Language: E

Number of pages: 1	Date: 2012-04-10	Approval by : Approved on : ☒ Vertical Group .....2012-04-18 ☒ Horizontal Committee.....2012-12-12 ☒ Standing Committee.....2013-03-12
Origin: VG1		

Question related to: Annex: Article:	EN/prEN: EN397:1995 & 2012 Clause: 6.1.4	Other:

Key words: Chin strap anchorage

Question:

Where are acceptable points of breakage for this test?

Where the chin strap ends and where the attachment begins can be unclear due to the varied designs of products. An example of this is a bifurcated strap design, for which the anchorage may be considered to begin at the lower part of the bifurcation, or at the connection to the shell/headband.

Solution:

Clause 3.9, which provides the definition for a 'chin strap anchorage', is ambiguous, not least because it refers to attachment of the chin strap to the 'helmet'.

A straightforward solution is not possible. It has been interpreted that if failure occurs in a way that does not conflict with the following points, then failure can be considered to be due to the chin-strap anchorage:

a) Failure must occur at the shell/headband side of any chin strap adjustment mechanism;

b) Failure must not attributable to any chin strap closure device;

c) Failure must not occur under the chin or around the jaw area;

d) Failure must not occur for what is obviously the chin strap material.

Sent to: ☒ members of the VG ☐ other(s) VG ☒ HC (2) ☒ TC (3) ☒ SC (4) ☐ other (5)

(3): 158 (5):

(1) Essential safety requirement
(2) HC = horizontal committee
(3) N° of CEN/TC (Secretary & Chairman)
(4) EEC Standing Committee 89/392
(5) To be specified

	CO-ORDINATION OF NOTIFIED BODIES **PPE-Directive 89/686/EEC + amendments** **RECOMMENDATION FOR USE**	CNB/P/01.012 Revision 01 Language: E

Number of pages: 1	Date: *14 April 2011*	Approval by : Approved on :
Origin : VG 1		☒ Vertical Group *18/04/2012* ☒ Horizontal Committee *12/12/2012* ☒ Standing Committee *12/03/2013*

Question related to: Annex: Article:	EN/prEN: Various Clause:	Other:

Key words:

Secondary impacts

Question:

Shall the results for secondary impacts, i.e. after bounce, be considered when making assessment?

Solution:

No.

Values obtained during secondary impacts, i.e. after bounce, shall be disregarded.

Sent to: ☒ members of the VG ☐ other(s) VG ☒ HC (2) ☒ TC (3) ☒ SC (4) ☐ other (5)

(5)

(1) Essential safety requirement
(2) HC = horizontal committee
(3) N° of CEN/TC (Secretary & Chairman)
(4) EEC Standing Committee 89/392
(5) To be specified

	CO-ORDINATION OF NOTIFIED BODIES **PPE-Directive 89/686/EEC + amendments** **RECOMMENDATION FOR USE**	CNB/P/01.013 Revision 01 Language: E

Number of pages: 1	Date: *10 April 2012*	Approval by : Approved on :
Origin : VG 1		☒ Vertical Group *18/04/2012* ☒ Horizontal Committee *12/12/2012* ☒ Standing Committee *12/03/2013*

Question related to: Annex: Article:	EN/prEN: EN 1078:1997 & 2012 Clause: 4.6.3	Other:

Key words:

Retention system, Fastening device

Question:

In cases where the design of the product ensures that the buckle does not sit on the jawbone, is it essential that the fastening device is capable of adjustment?

Solution:

No.

The primary purpose of this requirement is to ensure that the device does not sit on the jawbone.

Buckles positioned under the chin or around the jaw area would need to be moveable. Buckles positioned high on the side of the face that would not sit on the jawbone would not need to be moveable.

Sent to: ☒ members of the VG ☐ other(s) VG ☒ HC (2) ☒ TC (3) ☒ SC (4) ☐ other (5)

(5)

(1) Essential safety requirement
(2) HC = horizontal committee
(3) N° of CEN/TC (Secretary & Chairman)
(4) EEC Standing Committee 89/392
(5) To be specified

	CO-ORDINATION OF NOTIFIED BODIES **PPE-Directive 89/686/EEC + amendments** **RECOMMENDATION FOR USE**	CNB/P/01.014 Revision 01 Language: E

Number of pages: 1	Date: *10 April 2012*	Approval by : / Approved on :
Origin : VG 1		☒ Vertical Group *18/04/2012* ☒ Horizontal Committee *12/12/2012* ☒ Standing Committee *12/03/2013*

Question related to: Annex: Article:	EN/prEN: Various Clause:	Other:

Key words:

Penetration test block, radius

Question:

What is the correct radius for the penetration test block?

Solution:

The radius should be 65mm, with a tolerance of ±1mm.

Reason:

EN 1384 : 1996 (+A1), EN 1384 : 2012, EN 12492 : 2000 (+A1), EN 12492 : 2012 and EN 13087-3 : 2000 are standards that include specifications for a penetration test block.

(EN 13087-3 is referred to by EN 443 : 2008, EN 1077 : 2007, EN 14052 : 2005 & EN 14052 : 2012)

EN 1384 : 1996 (+A1) and EN 1384 : 2012 clause 6.5.2 specify a block with a radius of 65mm. They do not include a figure for the block, nor do they specify a diameter.

EN 12492 : 2000 (+A1) & EN 12492 : 2012 include a figure showing a block of radius 66.5mm with a diameter of 165mm. These dimensions are incompatible.

EN 13087-3 : 2000 figure 1 shows the radius of the test block as 65mm, but the diameter as 160mm. These dimensions are incompatible.

Either of the diameters stated would give a circumference larger than 495mm. The radius of 65mm would give a diameter that would permit the relevant sizes of helmet to be fitted and allow movement to test different positions.

Sent to: ☒ members of the VG ☐ other(s) VG ☒ HC (2) ☒ TC (3) ☒ SC (4) ☐ other (5)

(5)

(1) Essential safety requirement
(2) HC = horizontal committee
(3) N° of CEN/TC (Secretary & Chairman)
(4) EEC Standing Committee 89/392
(5) To be specified

	CO-ORDINATION OF NOTIFIED BODIES **PPE-Directive 89/686/EEC + amendments** **RECOMMENDATION FOR USE**	CNB/P/01.015 Revision 02 Language: E

Number of pages:	Date: 2014-05-07	Approval by : Approved on : ☒ Vertical Group .....08/05/2014 ☒ Horizontal Committee.....30/12/2014 ☒ Standing Committee.....19/09/2015
Origin: VG1		

Question related to: Annex: Article:	EN/prEN: EN 1077 : 2007 Clause: 5.4	Other:

Key words: Test area

Question:

How should the specified test area be marked on the helmet?

Considerations:

EN1077:2007 is the only standard (in the field of head protection) that defines the impact test area on the headform rather than on the helmet.

In order to perform tests, the test area has to be reproduced on the helmet. Depending upon interpretation of how this should be marked, this could lead to different test areas being marked on the helmet, and obviously to different test results.

Solution:

The test area should be projected horizontally from the headform to the outer helmet surface.

The 'corner' points of the test area shall be projected onto the helmet with lines laying on horizontal planes, parallel to reference plane; for side corners (points C, D, E) directed perpendicular to the vertical longitudinal plane, while for front and rear points (points A' and B) along the vertical longitudinal plane. Then the points marked on the helmet shall be connected by lines, using for example a flexible rule.

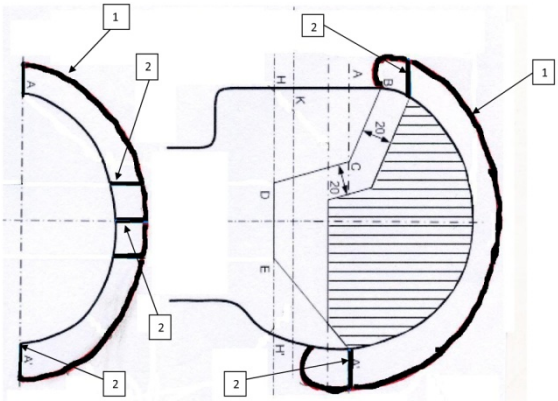

1 – Lines helmet outer shell

2 – Lines test area horizontal projection

Sent to: ☒ members of the VG ☐ other(s) VG ☒ HC (2) ☒ TC (3) ☒ SC (4) ☐ other (5)

(3): TC158 (5):

(1) Essential safety requirement
(2) HC = horizontal committee
(3) N° of CEN/TC (Secretary & Chairman)
(4) EEC Standing Committee 89/392
(5) To be specified

	CO-ORDINATION OF NOTIFIED BODIES **PPE-Directive 89/686/EEC + amendments** **RECOMMENDATION FOR USE**	CNB/P/01.016 Revision 03 Language: E

Number of pages: 1	Date: *7 May 2014*	Approval by : Approved on : ☒ Vertical Group 08/05/2014 ☒ Horizontal Committee 30/12/2014 ☒ Standing Committee 19/09/2015
Origin : VG 1		

Question related to: Annex: Article:	EN/prEN: EN 397:1995 & 2012 EN 812:1997 & 2012 Clause: EN 397 – 6.6.2, 6.7.2 / EN 812 – 6.5.2, 6.6.2	Other:

Key words:

Shock absorption, Resistance to penetration, impact velocity

Question:

Is 0.5% the correct value for the maximum permitted difference between the actual impact velocity and the theoretical velocity for the stated drop height?

Solution:

No, the permitted difference should be 5% maximum.

0.5% is impractical and all other TC158 standards that specify a similar requirement state 5%.

Sent to: ☒ members of the VG ☐ other(s) VG ☒ HC (2) ☒ TC (3) ☒ SC (4) ☐ other (5)

(5)

(1) Essential safety requirement
(2) HC = horizontal committee
(3) N° of CEN/TC (Secretary & Chairman)
(4) EEC Standing Committee 89/392
(5) To be specified

	CO-ORDINATION OF NOTIFIED BODIES **PPE-Directive 89/686/EEC + amendments** **RECOMMENDATION FOR USE**	CNB/P/01.017 Revision 01 Language: E

Number of pages: 1	Date: *10 April 2012*	Approval by : Approved on :
Origin : VG 1		☒ Vertical Group *18/04/2012* ☒ Horizontal Committee *12/12/2012* ☒ Standing Committee *12/03/2013*

Question related to: Annex: Article:	EN/prEN: EN 397:1995 & 2012 Clause: 5.2.1	Other:

Key words:

Very low temperature, pre-conditioning

Question:

Is it necessary to perform shock absorption and penetration testing at -10°C if the very low temperature conditioning at -20°C or -30°C has been requested?

Solution:

Yes, because testing at -10°C is a mandatory requirement.

Sent to: ☒ members of the VG ☐ other(s) VG ☒ HC (2) ☒ TC (3) ☒ SC (4) ☐ other (5)

(5)

(1) Essential safety requirement
(2) HC = horizontal committee
(3) N° of CEN/TC (Secretary & Chairman)
(4) EEC Standing Committee 89/392
(5) To be specified

	CO-ORDINATION OF NOTIFIED BODIES **PPE-Directive 89/686/EEC + amendments** **RECOMMENDATION FOR USE**	CNB/P/01.018 Revision 01 Language: E

Number of pages: 1	Date: 2012-04-18	Approval by : Approved on : ☒ Vertical Group .....2012-04-18 ☒ Horizontal Committee.....2012-12-12 ☒ Standing Committee.....2013-03-12
Origin: VG1 2010		

Question related to: Annex: Article:	EN/prEN: EN397:1995 & 2012 Clause:	Other:

Key words: Harness; Internal vertical clearance

Question:

Can an industrial helmet with an EPS liner in place of a conventional harness comply with EN397?

Solution:

Probably not.

There is no specific requirement that requires the use of a conventional harness. However, the Note under clause 3.5 implies that a certain design was being considered when the standard was written.

Whilst the presence of an EPS liner may not be cause for failure in itself, the group could not envisage a situation in which compliance with the requirements of clause 4.4 Internal vertical clearance could be met with an EPS liner instead of a conventional harness.

The requirements for Internal vertical clearance relate to ventilation. Whilst EN397 has dealt with this in a design restrictive manner, Notified Bodies must ensure that helmets meet ALL requirements of a standard in order to be marked with the standard number.

Sent to: ☒ members of the VG ☐ other(s) VG ☒ HC (2) ☒ TC (3) ☒ SC (4) ☐ other (5)

(3): 158 (5):

(1) Essential safety requirement
(2) HC = horizontal committee
(3) N° of CEN/TC (Secretary & Chairman)
(4) EEC Standing Committee 89/392
(5) To be specified

	CO-ORDINATION OF NOTIFIED BODIES **PPE-Directive 89/686/EEC + amendments** **RECOMMENDATION FOR USE**	CNB/P/01.019 Revision 01 Language: E

Number of pages: 1	Date: 2012-03-22	Approval by : Approved on : ☒ Vertical Group .....2012-04-18 ☒ Horizontal Committee.....2012-12-12 ☒ Standing Committee.....2013-03-12
Origin: VG1 Head Protection		

Question related to: Annex: Article:	EN/prEN: EN 443 : 2008 Clause: 4.11 Flame resistance	Other:

Key words: Helmets for Fire Fighting; Flame resistance

Question:

Is it allowed to substitute the tests described in EN 443:2008 "Helmets for fire fighting in buildings and other structures" clauses 4.11 and 5.13 "flame resistance" by the tests described in EN 136:1998 clauses 7.6.3 and 8.5.2 during an Approval and EC-Certification however marking the helmet according to clause 6 of the standard with "EN443:2008".

Solution:

No.

The tests in EN 443:2008 clauses 4.11 and 5.13 are completely different from the tests in EN 136:1998 clauses 7.6.3 and 8.5.2 with regard to

- time of impact,
- distance of the burners and sample under test,
- burner flame,
- positioning of the test sample.

Sent to: ☒ members of the VG ☐ other(s) VG ☒ HC (2) ☐ TC (3) ☒ SC (4) ☐ other (5)

(5)

(1) Essential safety requirement
(2) HC = horizontal committee
(3) N° of CEN/TC (Secretary & Chairman)
(4) EEC Standing Committee 89/392
(5) To be specified

	CO-ORDINATION OF NOTIFIED BODIES **PPE-Directive 89/686/EEC + amendments** **RECOMMENDATION FOR USE**	CNB/P/01.021 Revision 01 Language: E

Number of pages: 1	Date: 2013-04-22	Approval by : Approved on : ☒ Vertical Group .....2013-07-19 ☒ Horizontal Committee.....2014-12-30 ☒ Standing Committee.....2015-09-19
Origin: VG1		

Question related to: Annex: Article:	EN/prEN: EN 397:2012 + A1:2012 Clause: 5.2.5	Other:

Key words: Molten metal splash, assessment

Question:

Shall assessment be limited to the 50mm radius circle onto which the liquid metal is poured, or shall it apply to other areas of the helmet?

Solution:

Assessment shall apply to the shell of the helmet. With reference to the definition of clause 3.4, 'brim', the shell does not include a brim or gutter.

Reason:

The 50mm radius circle is just a target point for pouring of the metal.

Sent to: ☒ members of the VG ☐ other(s) VG ☒ HC (2) ☒ TC (3) ☒ SC (4) ☐ other (5)

(3): TC158 (5):

(1) Essential safety requirement
(2) HC = horizontal committee
(3) N° of CEN/TC (Secretary & Chairman)
(4) EEC Standing Committee 89/392
(5) To be specified

	CO-ORDINATION OF NOTIFIED BODIES **PPE-Directive 89/686/EEC + amendments** **RECOMMENDATION FOR USE**	CNB/P/01.022 Revision 01 Language: E

Number of pages: 1	Date: 2013-04-22	Approval by : Approved on : ☒ Vertical Group .....2013-04-22 ☒ Horizontal Committee.....2014-12-30 ☒ Standing Committee.....2015-09-19
Origin: VG1		

Question related to: Annex: Article:	EN/prEN: Various (see below) Clause: Various (see below)	Other:

Key words: Test position, Penetration testing, Molten metal testing

Question:

Certain standards make reference to the "top" of the helmet/bump cap when defining certain test positions. The top of the helmet/bump cap is not defined, so what is the "top"?

Solution:

The top of the helmet/bump cap is that point on the outside surface of the helmet/bump cap which would lie above the central vertical axis of the headform, should the helmet/bump cap be fitted normally to a headform of appropriate size. This may, or may not, coincide with the highest point of the helmet/bump cap when fitted to the test headform.

This applies to the following standards/clauses:

EN 397:2012 + A1:2012 clauses 6.7.3 & 6.12.3

EN 812:2012 clause 6.6.3

EN 12492:2012 clause 5.6.1

EN 14052:2012 +A1:2012 clause 6.11.3

Sent to: ☒ members of the VG ☐ other(s) VG ☒ HC (2) ☒ TC (3) ☒ SC (4) ☐ other (5)

(3): TC158 (5):

(1) Essential safety requirement
(2) HC = horizontal committee
(3) N° of CEN/TC (Secretary & Chairman)
(4) EEC Standing Committee 89/392
(5) To be specified

	CO-ORDINATION OF NOTIFIED BODIES **PPE-Directive 89/686/EEC + amendments** **RECOMMENDATION FOR USE**	CNB/P/01.023 Revision 01 Language: E

Number of pages: 1	Date: 2013-04-22	Approval by : Approved on : ☒ Vertical Group .....2013-04-22 ☒ Horizontal Committee.....2014-12-30 ☒ Standing Committee.....2015-09-19
Origin: VG1		

Question related to: Annex: Article:	EN/prEN: EN 12492:2012 Clause: 5.6	Other:

Key words: Penetration testing, sample restraint

Question:

How much restraint shall be used to hold a sample in position for testing?

Solution:

As little restraint as possible shall be used, but enough to ensure that the test is performed correctly. In some cases, this may be a reasonably significant amount of restraint.

Rationale:

For some designs of helmet, rotating the helmet upon the test block in order to target different parts of the 50mm radius circle may result in the test block being able to pass between the harness so that the shell rests on the test block. This situation would not occur when such a product was fitted on to a person or a full test headform. This was agreed to be an unfair condition and that sufficient restraint strapping should be used to prevent such occurrence during the test.

Sent to: ☒ members of the VG ☐ other(s) VG ☒ HC (2) ☒ TC (3) ☒ SC (4) ☐ other (5)

(3): TC158 (5):

(1) Essential safety requirement
(2) HC = horizontal committee
(3) N° of CEN/TC (Secretary & Chairman)
(4) EEC Standing Committee 89/392
(5) To be specified

	CO-ORDINATION OF NOTIFIED BODIES **PPE-Directive 89/686/EEC + amendments** **RECOMMENDATION FOR USE**	CNB/P/01.024 Revision 01 Language: E

Number of pages: 1	Date: 2013-04-22	Approval by : Approved on : ☒ Vertical Group .....2013-04-22 ☒ Horizontal Committee.....2014-12-30 ☒ Standing Committee.....2015-09-19
Origin: VG1		

Question related to: Annex: Article:	EN/prEN: EN 397:2012 + A1:2012 and EN 12492:2012 Clause:	Other:

Key words: Dual-marking

Question:

Is it possible to approve a product dual-marked for compliance with EN397:2012 + A1:2012 and EN12492:2012?

Solution:

Yes.

One way to achieve this is described below.

In principle, the helmet shall satisfy the design and performance requirements of each standard. In order to do this, the product can be provided with two chin-straps, one to satisfy the retention system requirements of EN397 and the other to satisfy the retention system requirements of EN12492. In such a case, the chinstraps must be very clearly labelled as to the applicability for each standard and the user instructions shall state clearly how the helmet is to be configured in order to satisfy each standard.

Sent to: ☒ members of the VG ☐ other(s) VG ☒ HC (2) ☒ TC (3) ☒ SC (4) ☐ other (5)

(3): TC158 (5):

(1) Essential safety requirement
(2) HC = horizontal committee
(3) N° of CEN/TC (Secretary & Chairman)
(4) EEC Standing Committee 89/392
(5) To be specified

	CO-ORDINATION OF NOTIFIED BODIES **PPE-Directive 89/686/EEC + amendments** **RECOMMENDATION FOR USE**	CNB/P/01.025 Revision 01 Language: E

Number of pages: 1	Date: 2013-04-22	Approval by : Approved on : ☒ Vertical Group .....2013-07-19 ☒ Horizontal Committee.....2014-12-30 ☒ Standing Committee.....2015-09-19
Origin: VG1		

Question related to: Annex: Article:	EN/prEN: EN 397:2012 + A1:2012 Clause: 6.12.2	Other:

Key words: Molten metal test, orientation

Question:

In what orientation should the helmet and headform be placed when the test is performed?

Solution:

The headform should be vertical and the helmet fitted in a normal wearing position

Sent to: ☒ members of the VG ☐ other(s) VG ☒ HC (2) ☒ TC (3) ☒ SC (4) ☐ other (5)

(3): TC158 (5):

(1) Essential safety requirement
(2) HC = horizontal committee
(3) N° of CEN/TC (Secretary & Chairman)
(4) EEC Standing Committee 89/392
(5) To be specified

	CO-ORDINATION OF NOTIFIED BODIES **PPE-Directive 89/686/EEC + amendments** **RECOMMENDATION FOR USE**	CNB/P/01.026 Revision 01 Language: E

Number of pages: 1	Date: 2013-04-22	Approval by : Approved on : ☒ Vertical Group .....2013-07-19 ☒ Horizontal Committee.....2014-12-30 ☒ Standing Committee.....2015-09-19
Origin: VG1		

Question related to: Annex: Article:	EN/prEN: EN 397:2012 + A1:2012 Clause: 4.9	Other:

Key words: Ventilation, area measurement, covers

Question:

Which area of ventilation should be assessed when the helmet includes hard covers/multiple layers and where the area of the aperture(s) in the cover/external layer is not the same area as the aperture(s) in the internal layer (shell)?

Solution:

The area of the smallest aperture(s) should be assessed, whether this/these be in the cover/external layer or in the internal layer.

Sent to: ☒ members of the VG ☐ other(s) VG ☒ HC (2) ☒ TC (3) ☒ SC (4) ☐ other (5)

(3): TC158 (5):

(1) Essential safety requirement
(2) HC = horizontal committee
(3) N° of CEN/TC (Secretary & Chairman)
(4) EEC Standing Committee 89/392
(5) To be specified

	CO-ORDINATION OF NOTIFIED BODIES **PPE-Directive 89/686/EEC + amendments** **RECOMMENDATION FOR USE**	CNB/P/01.027 Revision 01 Language: E

Number of pages: 1	Date: 2013-04-22	Approval by : Approved on : ☒ Vertical Group .....2013-07-19 ☒ Horizontal Committee.....2014-12-30 ☒ Standing Committee.....2015-09-19
Origin: VG1		

Question related to: Annex: Article:	EN/prEN: EN443:2008 Clause: 5.4.1	Other:

Key words: Shock absorption, headforms

Question:

For shock absorption testing of area 1a, should the headforms comply with the requirements of EN 960:2006, or is it acceptable to use headforms that comply only with EN 960:1994?

Solution:

The headforms should comply with EN960:2006.

Rationale:

EN 443:2008 clause 5.4.1 requires testing to be performed in accordance with EN 13087-2:2000. EN 13087-2:2000 makes dated reference to EN 960:1994. According to referencing rules, it could be assumed that the headforms should therefore comply with EN 960:1994.

However, EN 443:2008 itself makes dated reference to EN 960:2006.

Therefore, the interpretation has been made that testing should be performed in accordance with EN 13087-2:2000, but using equivalent headform sizes complying with EN 960:2006.

Sent to: ☒ members of the VG ☐ other(s) VG ☒ HC (2) ☒ TC (3) ☒ SC (4) ☐ other (5)

(3): TC158 (5):

(1) Essential safety requirement
(2) HC = horizontal committee
(3) N° of CEN/TC (Secretary & Chairman)
(4) EEC Standing Committee 89/392
(5) To be specified

	CO-ORDINATION OF NOTIFIED BODIES **PPE-Directive 89/686/EEC + amendments** **RECOMMENDATION FOR USE**	CNB/P/01.028 Revision 01 Language: E

Number of pages: 1	Date: 2013-04-22	Approval by : Approved on : ☒ Vertical Group .....2013-07-19 ☒ Horizontal Committee.....2014-12-30 ☒ Standing Committee.....2015-09-19
Origin: VG1		

Question related to: Annex: Article:	EN/prEN: EN443:2008 Clause: 5.8	Other:

Key words: Retention system strength, headforms

Question:

For retention system strength testing, should the headforms comply with the requirements of EN 960:2006, or is it acceptable to use headforms that comply only with EN 960:1994?

Solution:

The headforms should comply with EN960:2006.

Rationale:

EN 443:2008 clause 5.8 requires testing to be performed in accordance with EN 13087-5:2000. EN 13087-5:2000 makes dated reference to EN 960:1994. According to referencing rules, it could be assumed that the headforms should therefore comply with EN 960:1994.

However, EN 443:2008 itself makes dated reference to EN 960:2006.

Therefore, the interpretation has been made that testing should be performed in accordance with EN 13087-5:2000, but using equivalent headform sizes complying with EN 960:2006.

Sent to: ☒ members of the VG ☐ other(s) VG ☒ HC (2) ☒ TC (3) ☒ SC (4) ☐ other (5)

(3): TC158 (5):

(1) Essential safety requirement
(2) HC = horizontal committee
(3) N° of CEN/TC (Secretary & Chairman)
(4) EEC Standing Committee 89/392
(5) To be specified

	CO-ORDINATION OF NOTIFIED BODIES **PPE-Directive 89/686/EEC + amendments** **RECOMMENDATION FOR USE**	CNB/P/01.029 Revision 01 Language: E

Number of pages: 1	Date: 2013-04-22	Approval by : Approved on : ☒ Vertical Group .....2013-07-19 ☒ Horizontal Committee.....2014-12-30 ☒ Standing Committee.....2015-09-19
Origin: VG1		

Question related to: Annex: Article:	EN/prEN: EN 812:2012 Clause: 5.8	Other:

Key words: Marking

Question:

In clause 7.2.3 d), is the reference to clause 7.1 correct?

Solution:

No, reference should be to clause 7.2.2. instead

Rationale:

Clause 7.2.3 d) requires the significance of the markings under clause 7.1 to be explained. Clause 7.1 specifies the general markings, such as 'number of the European Standard', and requiring the significance of such markings to be explained seems illogical.

EN 397:2012 + A1:2012 clause 7.2.3 d) includes a very similar requirement, but instead it is the optional markings for which the significance must be explained.

It has been interpreted that the requirement in EN 812 was intended to be of a similar to that in EN 397.

Sent to: ☒ members of the VG ☐ other(s) VG ☒ HC (2) ☒ TC (3) ☒ SC (4) ☐ other (5)

(3): TC158 (5):

(1) Essential safety requirement
(2) HC = horizontal committee
(3) N° of CEN/TC (Secretary & Chairman)
(4) EEC Standing Committee 89/392
(5) To be specified

	CO-ORDINATION OF NOTIFIED BODIES **PPE-Directive 89/686/EEC + amendments** **RECOMMENDATION FOR USE**	CNB/P/01.030 Revision 01 Language: E

Number of pages: 1	Date: 2013-04-22	Approval by : Approved on : ☒ Vertical Group .....2013-07-19 ☒ Horizontal Committee.....2014-12-30 ☒ Standing Committee.....2015-09-19
Origin: VG1		

Question related to: Annex: 09- Article:	EN/prEN: EN 12492:2012 Clause: 4.1.4	Other:

Key words: Ventilation

Question:

Is it acceptable for a product to include adjustable ventilation that includes settings that would reduce the area of ventilation to less than the minimum area specified?

Solution:

Yes. Ventilation features shall be adjusted to their maximum opening when measurements are taken.

Sent to: ☒ members of the VG ☐ other(s) VG ☒ HC (2) ☒ TC (3) ☒ SC (4) ☐ other (5)

(3): TC158 (5):

(1) Essential safety requirement
(2) HC = horizontal committee
(3) N° of CEN/TC (Secretary & Chairman)
(4) EEC Standing Committee 89/392
(5) To be specified

	CO-ORDINATION OF NOTIFIED BODIES **PPE-Directive 89/686/EEC + amendments** **RECOMMENDATION FOR USE**	CNB/P/01.031 Revision 02 Language: E

Number of pages: 1	Date: 2013-04-22	Approval by : Approved on :
Origin: VG1		☒ Vertical Group .....08/05/2014 ☒ Horizontal Committee.....30/12/2014 ☒ Standing Committee.....19/09/2015

Question related to: Annex: Article:	EN/prEN: EN1384:2012 Clause: 4.1	Other:

Key words: Thickness measurement, Area of protection

Question:

For measurement of thickness of protective padding in the area of protection but outside of the test area, where should this measurement be made?

Solution:

The measurement should be made 12mm up from the lower edge of zone 2 as illustrated below (see also Figure 1 of EN1384) and shall then be compared with the minimum thickness measured within zone 1.

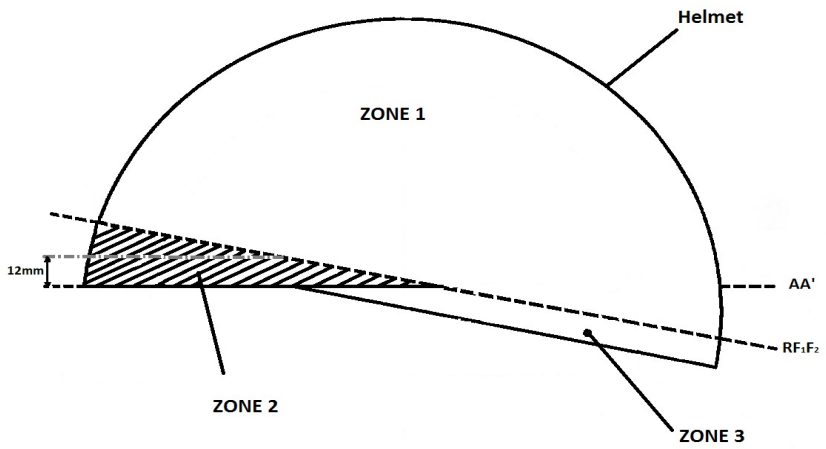

Rationale:

The test area equates to zone 1 of the illustration. The minimum thickness within this area should be measured to determine the minimum thickness to be used for comparison purposes.

The minimum area of protection comprises zones 1 and 2 of the illustration.

Zone 3 indicates a portion of the helmet that falls neither within the minimum area of protection nor the test area.

As a minimum, a helmet must cover zones 1 and 2. Coverage of zone 3 is not mandatory.

EN1384 is ambiguous from which edge of the area of protection the measurements at 12mm should be taken.

It has been interpreted that it should be 12mm from the lower edge of the area of protection, as illustrated above. The minimum thickness along this line should be compared to the minimum thickness in the test area (zone 1).

Sent to: ☒ members of the VG ☐ other(s) VG ☒ HC (2) ☒ TC (3) ☒ SC (4) ☐ other (5)

(3): TC158 (5):

(1) Essential safety requirement
(2) HC = horizontal committee
(3) N° of CEN/TC (Secretary & Chairman)
(4) EEC Standing Committee 89/392
(5) To be specified

	CO-ORDINATION OF NOTIFIED BODIES **PPE-Directive 89/686/EEC + amendments** **RECOMMENDATION FOR USE**	CNB/P/01.032 Revision 01 Language: E

Number of pages: 1	Date: 2013-04-22	Approval by : Approved on : ☒ Vertical Group .....2013-07-19 ☒ Horizontal Committee.....2014-12-30 ☒ Standing Committee.....2015-09-19
Origin: VG1		

Question related to: Annex: Article:	EN/prEN: EN 1384:2012 Clause: 6.2	Other:

Key words: Test sequence, sample restoration

Question:

Is it acceptable to restore samples following reversible damage before performing the next test in the test sequence?

Solution:

No, samples should be tested without restoration.

Rationale:

Reversible damage can occur during testing which could influence the outcome of tests later in the test sequence, e.g. detachment of ventilation covers might have a detrimental effect on penetration resistance.

Some standards specify a sequence of testing just to minimise the number of samples required for a test programme.

However, it was interpreted in this case that the sequence of testing was not just intended to reduce sample quantities, therefore samples should be left unchanged following each test before moving on to the next test in the sequence.

Sent to: ☒ members of the VG ☐ other(s) VG ☒ HC (2) ☒ TC (3) ☒ SC (4) ☐ other (5)

(3): TC158 (5):

(1) Essential safety requirement
(2) HC = horizontal committee
(3) N° of CEN/TC (Secretary & Chairman)
(4) EEC Standing Committee 89/392
(5) To be specified

	CO-ORDINATION OF NOTIFIED BODIES **PPE-Directive 89/686/EEC + amendments** **RECOMMENDATION FOR USE**	CNB/P/01.033 Revision 01 Language: E

Number of pages: 1	Date: 2013-04-22	Approval by : Approved on : ☒ Vertical Group .....2013-07-19 ☒ Horizontal Committee.....2014-12-30 ☒ Standing Committee.....2015-09-19
Origin: VG1		

Question related to: Annex: Article:	EN/prEN: EN 14052:2012 + A1:2012 Clause: 5.2.2	Other:

Key words: Resistance to penetration, helmet test support

Question:

Is the sample tested on a headform, as suggested by clause 5.2.2?

Solution:

No, the sample is tested on the test block specified by EN 13087-3.

Rationale:

It has been interpreted that reference to a headform was an editorial error.

Sent to: ☒ members of the VG ☐ other(s) VG ☒ HC (2) ☒ TC (3) ☒ SC (4) ☐ other (5)

(3): TC158 (5):

(1) Essential safety requirement
(2) HC = horizontal committee
(3) N° of CEN/TC (Secretary & Chairman)
(4) EEC Standing Committee 89/392
(5) To be specified

	CO-ORDINATION OF NOTIFIED BODIES **PPE-Directive 89/686/EEC + amendments** **RECOMMENDATION FOR USE**	CNB/P/01.035 Revision 01 Language: E

Number of pages: 1	Date: 2014-06-11	Approval by : Approved on : ☒ Vertical Group .....18/07/2014 ☒ Horizontal Committee.....30/12/2014 ☒ Standing Committee.....19/09/2015
Origin: VG1		

Question related to: Annex: Article:	EN/prEN: Various Clause: General	Other:

Key words: Test headforms, Helmet size

Question:

Which headform sizes are appropriate for claimed helmet sizes?

Solution:

For a given manufacturer's claimed head size or head size range for a helmet, test headforms should be selected as follows:

Helmet size (mm)	Headform size designation	Helmet size (mm)	Headform size designation
450	445	560	555
460	455	560/570	565
470	465	570	575
480	475	580	585
490	485	590	595
500	495	600	605
510	505	610	615
520	515	620	625
530	525	630	635
540	535	640	645
550	545		

Headform sizes stated by manufacturers are nominal and may not match exactly the sizes of headforms. Consequently, it is reasonable for a laboratory to choose a headform of size designation one either side of any stated size or size range by the manufacturer, and such a headform still to be considered an appropriate headform for the stated size range of the helmet under test.

The choices of headforms available for testing may be limited by the performance standard used for assessment.

Sent to: ☒ members of the VG ☐ other(s) VG ☒ HC (2) ☒ TC (3) ☒ SC (4) ☐ other (5)

(3): (5):

(1) Essential safety requirement
(2) HC = horizontal committee
(3) N° of CEN/TC (Secretary & Chairman)
(4) EEC Standing Committee 89/392
(5) To be specified

	CO-ORDINATION OF NOTIFIED BODIES **PPE-Directive 89/686/EEC + amendments** **RECOMMENDATION FOR USE**	CNB/P/01.036 Revision 01 Language: E

Number of pages: 1	Date: 2014-06-03	Approval by : Approved on : ☒ Vertical Group .....2014-07-18 ☒ Horizontal Committee.....2014-12-30 ☒ Standing Committee.....2015-09-19
Origin: VG1		

Question related to: Annex: Article:	EN/prEN: EN 13484:2012 Clause: Figure 2	Other:

Key words: Extent of coverage

Question:

Is the dimension of 25,5mm between points D & E correct?

Solution:

No, the drawing includes an error.

The 25,5mm dimension should be drawn between the vertical transverse plane and point E.

Rationale:

EN 13484:2012 figure 2 places point E at 25.5mm behind point D, but also behind the vertical transverse plane.

This is in contradiction, because 25,5mm behind point D would be in front of the vertical transverse plane.

EN 1077:2007 figure 1 is very similar and shows point E positioned 25,5 mm behind the vertical transverse plane.

Sent to: ☒ members of the VG ☐ other(s) VG ☒ HC (2) ☒ TC (3) ☒ SC (4) ☐ other (5)

(3): (5):

(1) Essential safety requirement
(2) HC = horizontal committee
(3) N° of CEN/TC (Secretary & Chairman)
(4) EEC Standing Committee 89/392
(5) To be specified

	CO-ORDINATION OF NOTIFIED BODIES **PPE-Directive 89/686/EEC + amendments** **RECOMMENDATION FOR USE**	CNB/P/01.037 Revision 01 Language: E

Number of pages: 1	Date: 2014-06-11	Approval by : Approved on : ☒ Vertical Group .....18/07/2014 ☒ Horizontal Committee.....30/12/2014 ☒ Standing Committee.....19/09/2015
Origin: VG1		

Question related to: Annex: Article:	EN/prEN: EN 1385:2012 Clause: Clause 5.2 & Figure 1	Other:

Key words: Coverage

Question:

Should point C be the mid-point of A-Z when measured over the surface of the headform, or when projected from the side?

Solution:

Point C should be the mid-point of A-Z when measured over the surface of the headform.

Sent to: ☒ members of the VG ☐ other(s) VG ☒ HC (2) ☒ TC (3) ☒ SC (4) ☐ other (5)

(3): (5):

(1) Essential safety requirement
(2) HC = horizontal committee
(3) N° of CEN/TC (Secretary & Chairman)
(4) EEC Standing Committee 89/392
(5) To be specified

	CO-ORDINATION OF NOTIFIED BODIES **PPE-Directive 89/686/EEC + amendments** **RECOMMENDATION FOR USE**	CNB/P/01.038 Revision 01 Language: E

Number of pages: 1	Date: 2014-06-11	Approval by : Approved on : ☒ Vertical Group .....18/07/2014 ☒ Horizontal Committee.....30/12/2014 ☒ Standing Committee.....19/09/2015
Origin: VG1		

Question related to: Annex: Article:	EN/prEN: EN 1385:2012 Clause: Clause 7.8 & Figure 4	Other:

Key words: Retention system effectiveness

Question:

In figure 4, where should the 600mm vertical dimension be measured from?

Solution:

The 600mm should be measured upwards from the reference plane.

Rationale:

With reference to EN 1078:2012 figure 5, an AA line was marked to show a section in the drawing.

The AA line was marked erroneously in figure 4 of EN 1385, as no section was included in the drawing. All other standards that include this test require the 600mm vertical dimension to extend upwards from the reference plane.

Sent to: ☒ members of the VG ☐ other(s) VG ☒ HC (2) ☒ TC (3) ☒ SC (4) ☐ other (5)

(3): (5):

(1) Essential safety requirement
(2) HC = horizontal committee
(3) N° of CEN/TC (Secretary & Chairman)
(4) EEC Standing Committee 89/392
(5) To be specified

	CO-ORDINATION OF NOTIFIED BODIES **PPE-Directive 89/686/EEC + amendments** **RECOMMENDATION FOR USE**	CNB/P/01.039 Revision 01 Language: E

Number of pages: 1	Date: 2014-06-11	Approval by : Approved on : ☒ Vertical Group .....2014-07-18 ☒ Horizontal Committee.....2014-12-30 ☒ Standing Committee.....2015-09-19
Origin: VG1 2014 annual meeting		

Question related to: Annex: Article:	EN/prEN: EN 397:2012 Clause: 7.1 f)	Other:

Key words: Helmet shell, Materials, Marking

Question:

In the case of a helmet for which the exterior comprises multiple components of different materials, what is the shell for which the abbreviation of the material shall be marked?

Solution:

The shell shall be considered to be the predominant component of the exterior of the helmet and an abbreviation for the material of that predominant component shall be marked.

Abbreviations for the materials of other components may also be marked, however, the abbreviation used must match the material of the component upon which it is marked.

Sent to: ☒ members of the VG ☐ other(s) VG ☒ HC (2) ☒ TC (3) ☒ SC (4) ☐ other (5)

(3): (5):

(1) Essential safety requirement
(2) HC = horizontal committee
(3) N° of CEN/TC (Secretary & Chairman)
(4) EEC Standing Committee 89/392
(5) To be specified

Vertical Recommendation for Use sheets (RfUs)
of Vertical Group 2 "Respiratory Protective Equipment"
of the European Coordination of Notified Bodies in the field of PPE

No.	Version	Reference	Key words	Approved by Vertical Group 2	Approved by Horizontal Committee	Approved by PPE Expert Group
02.003	01		Variations - Conformity	18/05/2011	12/09/2011	15/05/2012
02.005	04	EN 14594 - EN 14593	Airlines; mobile high pressure air supply system; CE marking	01/12/2012	15/02/2013	12/03/2013
02.015	03		Test panel, total inward leakage testing (TIL), inward leakage testing (IL)	12/04/2012	12/12/2012	12/03/2013
02.017	01		Reduced test panel; inward leakage	18/05/2011	12/09/2011	15/05/2012
02.018	04	EN 149:2001	Modified PPE	18/04/2013	12/03/2015	01/10/2015
02.025	01	EN 136	Full face mask, flammability, head harness	18/05/2011	12/09/2011	15/05/2012
02.027	03	EN 136,Clause : Requirements § 7.6 testing § 8.5 & 8.13	Full face mask, flammability, head harness	12/04/2012	12/12/2012	12/03/2013
02.032	01	EN 14594 / ISO 14877, Clause: 7.21 Blasting pressure	Respiratory protective equipments, equipment for blasting, test method	18/05/2011	12/09/2011	15/05/2012
02.036	01	EN 250	Respiratory protective equipments, open-circuit self-contained compressed air diving apparatus (SCUBA), PPE components	18/05/2011	12/09/2011	15/05/2012
02.038	03	All	Respiratory protective equipments, EC Type examination, validity of type examination certificates	12/04/2012	12/12/2012	12/03/2013
02.043	01	EN 137:2006	Respiratory protective equipments, flame engulfment test, bulky devices	18/05/2011	12/09/2011	15/05/2012
02.044	01	EN 13794: 2002, EN 13274-2:2001	Respiratory protective equipments, practical performance tests	18/05/2011	12/09/2011	15/05/2012
02.046	03	EN 13794:2002	Self-contained closed-circuit breathing apparatus for escape (SCCBA); Carbon-dioxide (CO_2) content	12/04/2012	12/12/2012	12/03/2013
02.047	03	EN 12941 :1998	Powered helmet / hood, filter connection	12/04/2012	12/12/2012	12/03/2013
02.048	01	RPDs EN standards	Equipment standard, test standard	18/05/2011	12/09/2011	15/05/2012
02.049	01		Children, EN testing, CE certification	18/05/2011	12/09/2011	15/05/2012
02.050	03	EN 140:1998, Clause: 9.3 and 8.2.6	Marking; shelf-life; lifetime; half-masks; quarter-masks; pictogram	12/04/2012	12/12/2012	12/03/2013
02.051	01	EN 140:1998, Clause: 6.12.1	Valves, replacement	12/04/2012	12/12/2012	12/03/2013
02.053	02	EN 14594:2005; EN 13274:2001	Abrasive blasting, protective clothing, blasting hood	12/04/2012	12/03/2015	01/10/2015
02.054	02	All	Total Inward Leakage, talking passage	01/12/2012	15/02/2013	12/03/2013

Vertical Recommendation for Use sheets (RfUs)
of Vertical Group 2 "Respiratory Protective Equipment"
of the European Coordination of Notified Bodies in the field of PPE

No.	Version	Reference	Key words	Approved by Vertical Group 2	Approved by Horizontal Committee	Approved by PPE Expert Group
02.055	02	EN 14387:2004 (A1:2008)	Marking, filter packaging	12/04/2012	12/03/2015	01/10/2015
02.056	02	EN 14594:2005; EN 14593:2005	Airlines, temperature conditioning, samples	13/04/2012	12/03/2015	01/10/2015
02.057	02	EN 14594:2005; EN 13274-3:2001	Breathing resistance, Exhalation resistance, continuous flow compressed air line breathing apparatus	12/04/2012	12/03/2015	01/10/2015
02.058	01	-	Reporting, test results	10/04/2014	12/03/2015	01/10/2015
02.059	01	EN 137:2006	Resistance to temperature	10/04/2014	12/03/2015	01/10/2015
02.060	01	EN 137:2006	Temperature performance	10/04/2014	12/03/2015	01/10/2015
02.061	01	EN 149:2001+A1: 2009; EN 1827:1999+ A1:2009	Choice of standard	10/04/2014	12/03/2015	01/10/2015
02.062	00	EN 143:2001/ A1:2006	Filter, clogging, penetration test	20/04/2016	28/07/2016	02/11/2016
02.063	00	EN 14387:2008	Carbon Monoxide Filter Marking	20/04/2016	28/07/2016	02/11/2016
02.064	01	EN 143:2001/ A1:2006	Particle filter, clogging	20/04/2016	28/07/2016	02/11/2016

Note: Recommendation for Use sheets which deal with withdrawn and / or superseded standards and which no longer apply to new certifications are published as reference for previous files.

	CO-ORDINATION OF NOTIFIED BODIES **PPE-Directive 89/686/EEC + amendments** **RECOMMENDATION FOR USE**	CNB/P/02.003 Revision 01 Language: E

Number of pages: 1	Date: 2011-05-18	Approval by : Approved on :
Origin : Vertical Group 2		☒ Vertical Group 2011-05-18 ☒ Horizontal Committee 2011-09-12 ☒ Standing Committee 2012-05-15

Question related to: Annex: Article:	EN/prEN: Clause:	Other:

Key words: variations, conformity

Question:

How to treat the many variations of essentially the same equipment?

e. g. a turbo unit with a series of different facepieces / hoods and filters.

How many tests should be performed?

Solution:

Perform as many tests as needed to verify the conformity of all elements in the different versions of the equipment also perform tests to verify the conformity of the complete equipment.

Comment:

This suggestion was made that Notified Bodies should make their own decisions to establish the same testing procedures for all testhouses.

Sent to: ☒ members of the VG ☐ other(s) VG ☒ HC (2) ☐ TC (3) ☒ SC (4) ☐ other (5)

(5)

(1) Essential safety requirement
(2) HC = horizontal committee
(3) N° of CEN/TC (Secretary & Chairman)
(4) EEC Standing Committee 89/392
(5) To be specified

	CO-ORDINATION OF NOTIFIED BODIES **PPE-Directive 89/686/EEC + amendments** **RECOMMENDATION FOR USE**	CNB/P/02.005 Revision 04 Language: E

Number of pages: 1	Date: 2012-04-11	Approval by : Approved on :
Origin : Vertical Group 2		☒ Vertical Group 2012-12-01 ☒ Horizontal Committee 2013-02-15 ☒ Standing Committee 2013-03-12

Question related to: Directive 89/686/EEC	EN/prEN: EN 14594 - EN 14593	Other:
Annex: Article:	Clause:	

Key words: airlines; mobile high pressure air supply system; CE marking

Question:

When a manufacturer supplies a mobile high pressure air supply system (airline trolley) and/or a filter unit to produce quality breathing air, which is/are intended to be used with compressed airline breathing apparatus, should the trolley or filter unit carry a CE marking?

Solution:

The standards EN 14594:2005, EN 14593-1:2005 and EN 14593-2:2005 provide for requirements and test methods for mobile high pressure air supply systems intended to be used with compressed airline breathing apparatus. Mobile high pressure air supply systems are a part of the PPE and they shall carry the CE marking in compliance with Directive 89/686/EEC (other Directives may apply).

The filter unit is considered to be a spare part of a complete mobile high pressure air supply system, by consequence the filter unit shall not bear a CE marking in compliance with Directive 89/686/EEC (other Directives may apply).

Sent to: ☒ members of the VG ☐ other(s) VG ☒ HC (2) ☐ TC (3) ☒ SC (4) ☐ other (5)

(5)

(1) Essential safety requirement
(2) HC = horizontal committee
(3) N° of CEN/TC (Secretary & Chairman)
(4) EEC Standing Committee 89/392
(5) To be specified

	CO-ORDINATION OF NOTIFIED BODIES **PPE-Directive 89/686/EEC + amendments** **RECOMMENDATION FOR USE**	CNB/P/02.015 Revision 03 Language: E

Number of pages: 1	Date: 2012-04-12	Approval by : Approved on :
Origin : Vertical Group 2		☒ Vertical Group *2012-04-12* ☒ Horizontal Committee *2012-12-12* ☒ Standing Committee *2013-03-12*

Question related to: Annex: Article:	EN/prEN: Clause:	Other:

Key words:

test panel, total inward leakage testing (TIL), inward leakage testing (IL)

Question:

For (total) inward leakage testing the EN standards of RPD typically require a test panel of 10 persons.

If the RPD is submitted in several sizes, should a test house select the test panel to ensure that all sizes have been tested?

Solution:

In the case of an RPD being submitted for type examination in more than one size then the test panel should be arranged so that all sizes are tested for inward leakage.

Sufficient specimens shall be provided to enable a total of 10 IL / TIL tests to be performed.

It may not be possible to test all sizes of RPD.

Sent to: ☒ members of the VG ☐ other(s) VG ☒ HC (2) ☐ TC (3) ☒ SC (4) ☐ other (5)

(5)

(1) Essential safety requirement
(2) HC = horizontal committee
(3) N° of CEN/TC (Secretary & Chairman)
(4) EEC Standing Committee 89/392
(5) To be specified

	CO-ORDINATION OF NOTIFIED BODIES **PPE-Directive 89/686/EEC + amendments** **RECOMMENDATION FOR USE**	CNB/P/02.017 Revision 01 Language: E

Number of pages: 1	Date: 2011-05-18	Approval by : Approved on : ☒ Vertical Group 2011-05-18 ☒ Horizontal Committee 2011-09-12 ☒ Standing Committee 2012-05-15
Origin : Vertical Group 2		

Question related to: Annex: Article:	EN/prEN: Clause:	Other:

Key words:

reduced test panel; inward leakage

Question:

Can a reduced test panel for inward leakage be used to assess compliance for modified respiratory protective equipment (RPE)?

Suggestion: The inward leakage test is not in case of every change an appropriate test.

Solution:

A reduced inward leakage test panel (fewer test subjects than specified in the relevant standard) shall not be used in order not to deviate from the statistical basis for the requirements of the standard.

Sent to: ☒ members of the VG ☐ other(s) VG ☒ HC (2) ☐ TC (3) ☒ SC (4) ☐ other (5)

(5)

(1) Essential safety requirement
(2) HC = horizontal committee
(3) N° of CEN/TC (Secretary & Chairman)
(4) EEC Standing Committee 89/392
(5) To be specified

	CO-ORDINATION OF NOTIFIED BODIES **PPE-Directive 89/686/EEC + amendments** **RECOMMENDATION FOR USE**	CNB/P/02.018 Revision 04 Language: E

Number of pages: 1	Date: 2015-01-28	Approval by : Approved on :
Origin : Vertical Group 2		☒ Vertical Group 2013-04-18 ☒ Horizontal Committee 2015-03-12 ☒ Standing Committee 2015-10-01

Question related to: Annex: Article:	EN/prEN: 149:2001 Clause:	Other:

Key words:
Modified PPE

Question:
If an existing, certified, filtering facepiece (EN 149) is modified by adding an exhalation valve, can a reduced panel (fewer tests subjects) for total inward leakage testing be used to assess compliance of the modified product?

Solution:
No, it is not possible to reduce the number of tests because the additional exhalation valve has a noticeable influence on the expected performance.
Where an exhalation valve is added to a certified filtering half mask (EN 149) the product is considered as a new model.

Sent to: ☒ members of the VG ☐ other(s) VG ☒ HC (2) ☐ TC (3) ☒ SC (4) ☐ other (5)

(5)

(1) Essential safety requirement
(2) HC = horizontal committee
(3) N° of CEN/TC (Secretary & Chairman)
(4) EEC Standing Committee 89/392
(5) To be specified

	CO-ORDINATION OF NOTIFIED BODIES **PPE-Directive 89/686/EEC + amendments** **RECOMMENDATION FOR USE**	CNB/P/02.025 Revision 01 Language: E

Number of pages: 1	Date: 2011-05-18	Approval by : Approved on : ☒ Vertical Group 2011-05-18 ☒ Horizontal Committee 2011-09-12 ☒ Standing Committee 2012-05-15
Origin : Vertical Group 2		

Question related to: Annex: Article:	EN/prEN: EN136 Clause:	Other:

Key words:

Full face mask, flammability, head harness

Question:

1. Shall the head harness of a full face mask be included in the components under test?
2. If a head harness is tested and does not fail the flammability test, but is damaged so that a post-flammability leaktightness test cannot be satisfied, shall this be considered unsatisfactory, or can the damage be compensated for by modification or assistance to the tested sample?

Solution:

1. All parts of the face mask, including the head harness, shall be exposed to the flame. The exposure of the components shall be such that they are tested under *"worst-case" conditions*. (Discuss: see RFU 02.027, probably contradiction)

2. The post-flammability leaktightness requirement shall be satisfied without modification or assistance to the device tested.

Sent to: ☒ members of the VG ☐ other(s) VG ☒ HC (2) ☐ TC (3) ☒ SC (4) ☐ other (5)

(5)

(1) Essential safety requirement
(2) HC = horizontal committee
(3) N° of CEN/TC (Secretary & Chairman)
(4) EEC Standing Committee 89/392
(5) To be specified

	CO-ORDINATION OF NOTIFIED BODIES **PPE-Directive 89/686/EEC + amendments** **RECOMMENDATION FOR USE**	CNB/P/02.027 Revision 03 Language: E

Number of pages: 1	Date: 2012-04-12	Approval by : Approved on : ☒ Vertical Group 2012-04-12 ☒ Horizontal Committee 2012-12-12 ☒ Standing Committee 2013-03-12
Origin : Vertical Group 2		

Question related to: Annex: Article:	EN/prEN: EN136 Clause: Requirements § 7.6 testing § 8.5 & 8.13	Other:

Key words:

Full face mask, flammability, head harness

Question:

Taking consideration the SC3/ N325 document

Q1 Shall the head harness be targeted directly?

Q2 How shall the mask be oriented when testing?

Q3 Shall burning of the head harness for more than 5s be a failure?

Q4 May the mask be removed from the head form between the flammability test and the leak tightness test?

Q5 If a product satisfies the post-flammability leak tightness test, even with mechanical damage (which may include breakage) to the head harness, is this a failure?

Solution:

A1 No.

A2 The laboratory shall decide on the appropriate orientations to ensure that all relevant components, with the exception of the head harness, are exposed directly. Three samples shall be tested, with a new orientation for each sample.

A3 Yes. If burning of the head harness for more than 5s results from indirect exposure, then this is a failure.

A4 Yes because this is the practice of the majority of the test houses.

A5 No.

Sent to: ☒ members of the VG ☐ other(s) VG ☒ HC (2) ☐ TC (3) ☒ SC (4) ☐ other (5)

(5)

(1) Essential safety requirement
(2) HC = horizontal committee
(3) N° of CEN/TC (Secretary & Chairman)
(4) EEC Standing Committee 89/392
(5) To be specified

	CO-ORDINATION OF NOTIFIED BODIES **PPE-Directive 89/686/EEC + amendments** **RECOMMENDATION FOR USE**	CNB/P/02.032 Revision 01 Language: E

Number of pages: 1	Date: 2011-05-18	Approval by : Approved on :
Origin : Vertical Group 2		☒ Vertical Group 2011-05-18 ☒ Horizontal Committee 2011-09-12 ☒ Standing Committee 2012-05-15

Question related to: Annex: Article:	EN14594 / ISO 14877 Clause: 7.21 Blasting pressure	Other:

Key words:

Respiratory Protective equipments, equipment for blasting, test method

Question:

How should the pressure be adjusted for the blasting operation with the checking device in accordance with Figure 2?

Solution:

At point X of the checking device a small tube (ca. 4 mm diameter) which is open against the direction of the blasting stream has to be inserted. For adjusting the positive pressure to 4 bar no abrasive material is added.

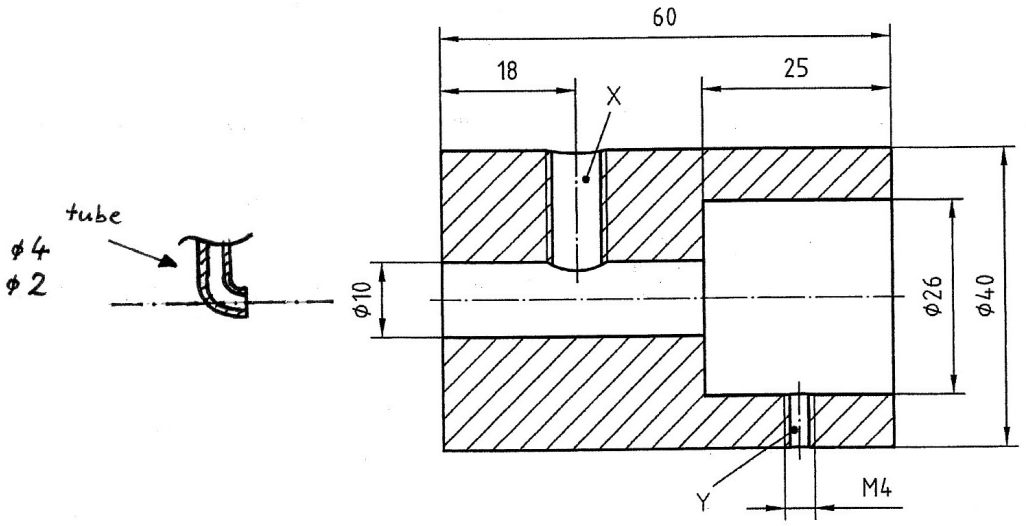

Sent to: ☒ members of the VG ☐ other(s) VG ☒ HC (2) ☒ TC (3) ☒ SC (4) ☐ other (5)

(5)

(1) Essential safety requirement
(2) HC = horizontal committee
(3) N° of CEN/TC (Secretary & Chairman)
(4) EEC Standing Committee 89/392
(5) To be specified

	CO-ORDINATION OF NOTIFIED BODIES **PPE-Directive 89/686/EEC + amendments** **RECOMMENDATION FOR USE**	CNB/P/02.036 Revision 01 Language: E

Number of pages: 1	Date: 2011-05-18	Approval by : Approved on : ☒ Vertical Group 2011-05-18 ☒ Horizontal Committee 2011-09-12 ☒ Standing Committee 2012-05-15
Origin : Vertical Group 2		

Question related to: PPE Directive	EN: 250	Other:
Annex: Article: 1§2.c	Clause:	

Key words:

Respiratory Protective equipments, Open-circuit self-contained compressed air diving apparatus (SCUBA), PPE Components

Question:

Q1: Can a diving regulator, as a SCUBA sub-assembly consisting of a pressure reducer, a medium pressure hose and a demand valve, be considered as an interchangeable component of a PPE in the meaning of art. 1 §2.c of the PPE Directive?

Q2: Provided that, in most cases, a pressure reducer, a medium pressure hose or a demand valve of a diving regulator can be disassembled without using special tools and can apparently be replaced with other similar devices, can they be considered as interchangeable components of a PPE in the meaning of art. 1 §2.c of PPE Directive?

Solution:

A1: YES. A diving regulator can be mounted on a SCUBA and removed from it directly by the user with its hands. A diving regulator is specifically designed and manufactured to be interchanged with other similar products on a SCUBA. It will consequently bear one EC marking and it will be provided with its user's manual.

A2: NO. Even if a pressure reducer, a medium pressure hose or a demand valve can be disassembled easily and without using any special tool, they are not generally designed and manufactured to be disassembled by the user.

In fact the calibration of a diving regulator is performed at factory level exclusively on the assembled device.

If a pressure reducer, a medium pressure hose or a demand valve come alone on the market they will be accompanied by an information leaflet from the manufacturer stating at least the following:

a) a clear warning that the product is a spare part of a specified model or models, properly certified and CE marked, of diving regulator. The information leaflet will give clear reference to the user's manual of the model to which the spare part is applicable.

b) Where the components of a diving regulator are designed to be replaced by the user, the manufacturer shall provide clear guidance on how this is performed and the need for any subsequent recalibration.

Sent to: ☒ members of the VG ☐ other(s) VG ☒ HC (2) ☐ TC (3) ☒ SC (4) ☐ other (5)

(5)

(1) Essential safety requirement
(2) HC = horizontal committee
(3) N° of CEN/TC (Secretary & Chairman)
(4) EEC Standing Committee 89/392
(5) To be specified

	CO-ORDINATION OF NOTIFIED BODIES **PPE-Directive 89/686/EEC + amendments** **RECOMMENDATION FOR USE**	CNB/P/02.038 Revision 03 Language: E

Number of pages: 1	Date: 2012-04-12	Approval by : Approved on : ☒ Vertical Group 2012-04-12 ☒ Horizontal Committee 2012-12-12 ☒ Standing Committee 2013-03-12
Origin : Vertical Group 2		

Question related to: Annex: Article:	EN/prEN: all Clause:	Other:

Key words:

Respiratory Protective equipments, EC Type examination, validity of type examination certificates

Question:

If the presumption of conformity for respiratory protective equipment is withdrawn from a harmonized standard, because it is no longer considered to fully satisfy the basic health and safety requirements of Annex II of the PPE Directive, what procedure should be applied by Notified Bodies for existing certificates?

Solution:

Notified Bodies shall instruct the RPE-manufacturer(s) concerned to update the certification otherwise the certificate shall be withdrawn.

Transition period should be advised by the relevant EU Authority

Sent to: ☒ members of the VG ☐ other(s) VG ☒ HC (2) ☐ TC (3) ☒ SC (4) ☐ other (5)

(5)

(1) Essential safety requirement
(2) HC = horizontal committee
(3) N° of CEN/TC (Secretary & Chairman)
(4) EEC Standing Committee 89/392
(5) To be specified

	CO-ORDINATION OF NOTIFIED BODIES **PPE-Directive 89/686/EEC + amendments** **RECOMMENDATION FOR USE**	CNB/P/02.043 Revision 01 Language: E

Number of pages: 1	Date: 2011-05-18	Approval by : Approved on : ☒ Vertical Group 2011-05-18 ☒ Horizontal Committee 2011-09-12 ☒ Standing Committee 2012-05-15
Origin : Vertical Group 2		

Question related to: Annex: Article:	EN 137:2006 Clause:	Other:

Key words:
Respiratory Protective Equipments, flame engulfment test, bulky devices

Question:

EN 137:2006, method 7.4.1.3 figure 3 specifies the distance between the burner plates.
How should the test been carried out for large devices, where the space between the burner plates and the nearest point of the device becomes smaller than 50 mm?

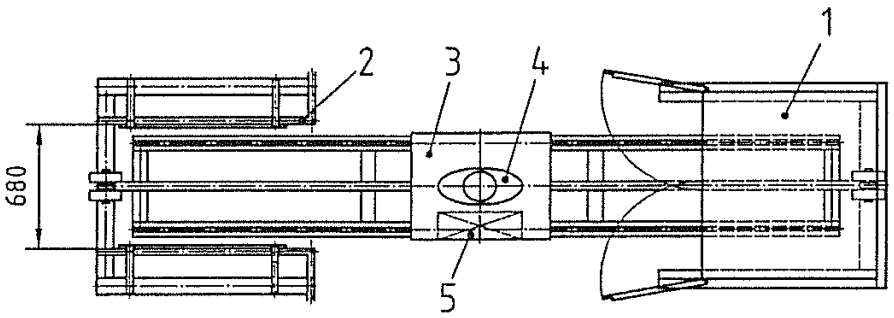

Solution:

Adjust the burner plate(s) position(s) so that the minimum distance between the nearest point of the device and the burner plate(s) becomes 50 mm. This shall be achieved without changing the manikin's position which shall remain in the centre of the original configuration of the burner plates.

Sent to: ☒ members of the VG ☐ other(s) VG ☒ HC (2) ☐ TC (3) ☒ SC (4) ☐ other (5)

(5)

(1) Essential safety requirement
(2) HC = horizontal committee
(3) N° of CEN/TC (Secretary & Chairman)
(4) EEC Standing Committee 89/392
(5) To be specified

	CO-ORDINATION OF NOTIFIED BODIES **PPE-Directive 89/686/EEC + amendments** **RECOMMENDATION FOR USE**	CNB/P/02.044 Revision 01 Language: E

Number of pages: 1	Date: 2011-05-18	Approval by : Approved on : ☒ Vertical Group 2011-05-18 ☒ Horizontal Committee 2011-09-12 ☒ Standing Committee 2012-05-15
Origin : Vertical Group 2		

Question related to: Annex: Article:	EN 13794:2002 , EN 13274-2:2001 Clause:	Other:

Key words:

Respiratory Protective Equipments, practical performance tests

Question:

EN 13794:2002 refers to wrong activities in the test method standard EN 13274-2:2001.

What are the correct references?

Solution:

Replace in clause 7.16.2.2 of EN 13794:2002 the numbers 16, 20, 17, 18 by 7, 9, 13, 8.

Replace in clause 7.16.2.3 of EN 13794:2002 the number 16 by 7.

Replace in clause 7.16.3 of EN 13794:2002 the number 15 by 1.

Sent to: ☒ members of the VG ☐ other(s) VG ☒ HC (2) ☒ TC (3) ☒ SC (4) ☐ other (5)

(5)

(1) Essential safety requirement
(2) HC = horizontal committee
(3) N° of CEN/TC (Secretary & Chairman)
(4) EEC Standing Committee 89/392
(5) To be specified

	CO-ORDINATION OF NOTIFIED BODIES **PPE-Directive 89/686/EEC + amendments** **RECOMMENDATION FOR USE**	CNB/P/02.046 Revision 03 Language: E

Number of pages: 1	Date: 2012-04-12	Approval by : Approved on : ☒ Vertical Group 2012-04-12 ☒ Horizontal Committee 2012-12-12 ☒ Standing Committee 2013-03-12
Origin : Vertical Group 2		

Question related to: Annex: Article:	EN 13794:2002 Clause:	Other:

Key words:

Self-contained closed-circuit breathing apparatus for escape (SCCBA); Carbon-dioxide (CO_2) content

Question:

Why shall the requirement in EN 13794, clause 6.19.3, “After the rated working duration and up to a breathing resistance of 35 mbar the CO_2 content shall not exceed 3.0 percent by volume”, apply for devices with a rated duration of less/equal 15 minutes only?

Solution:

Test as if a new paragraph would be inserted after the first sentence in clause 6.19.2, 2nd paragraph so that the wording “After the rated working duration and up to a breathing resistance of 35 mbar the CO_2 content shall not exceed 3.0 percent by volume” clearly applies to all self-contained closed-circuit breathing apparatus for escape (SCCBA).

Perform the tests in accordance with clause 7.10.1 of the standard.

Explanatory statement :

Since SCCBA normally don’t include a warning device which allows the user to notice that the rated duration is exceeded, the only indication for the exhaustion of oxygen is a high inhalation resistance.

Due to the PPE Directive Annex II, clause 1.2 “Absence of risks and other 'inherent' nuisance factors” the “PPE must be so designed and manufactured as to preclude risks and other nuisance factors under foreseeable conditions of use”.

The usage of a SCCBA as long as it supports breathing, regardless of its rated working duration, is a foreseeable condition of use if the wearer is in an escape situation. An exceedance of the 3 percent by volume limit of inhaled CO_2 is a risk for the user, however.

Sent to: ☒ members of the VG ☐ other(s) VG ☒ HC (2) ☐ TC (3) ☒ SC (4) ☐ other (5)

(5)

(1) Essential safety requirement
(2) HC = horizontal committee
(3) N° of CEN/TC (Secretary & Chairman)
(4) EEC Standing Committee 89/392
(5) To be specified

	CO-ORDINATION OF NOTIFIED BODIES **PPE-Directive 89/686/EEC + amendments** **RECOMMENDATION FOR USE**	CNB/P/02.047 Revision 03 Language: E

Number of pages: 1	Date: 2012-04-12	Approval by : Approved on : ☒ Vertical Group 2012-04-12 ☒ Horizontal Committee 2012-12-12 ☒ Standing Committee 2013-03-12
Origin : VG2 Respiratory Protective equipment		

Question related to: Annex: Article:	EN 12941:1998 Clause:	Other:

Key words: powered helmet/hood, filter connection

Question:

EN 12941:1998/A2:2008 requires that a hood/helmet without integrated blower must not contain a standard thread according to EN 148-1 and that the system is designed in such a way that it shall not be possible to connect a filter directly to the hood/helmet. Does the understanding of “directly” also exclude a design where a connection of a filter to a hood/helmet can be done by a hose bypassing the blower?

Solution:

The breathing hose is considered as an extension of the hood/helmet and therefore the thread restrictions shall be applied also to the end of the breathing hose (see clause 6.3.1 in EN 12941:1998/A2:2008)

Sent to: ☒ members of the VG ☐ other(s) VG ☒ HC (2) ☐ TC (3) ☒ SC (4) ☐ other (5)

(5)

(1) Essential safety requirement
(2) HC = horizontal committee
(3) N° of CEN/TC (Secretary & Chairman)
(4) EEC Standing Committee 89/392
(5) To be specified

	CO-ORDINATION OF NOTIFIED BODIES **PPE-Directive 89/686/EEC + amendments** **RECOMMENDATION FOR USE**	CNB/P/02.048 Revision 01 Language: E

Number of pages: 1	Date: 2011-05-18	Approval by :	Approved on :
Origin : Vertical Group 2		☒ Vertical Group ☒ Horizontal Committee ☒ Standing Committee	2011-05-18 2011-09-12 2012-05-15

Question related to: Annex: Article:	EN/prEN: RPDs EN standards Clause:	Other:

Key words: equipment standard, test standard

Question:

When test methods differ between device and test standards, which one has to be used?

Solution:

The test method which is required by the device standard has to apply.

If the test description in the device standard is misleading/imprecise/incomplete the test standard could give clarification.

Sent to: ☒ members of the VG ☐ other(s) VG ☒ HC (2) ☐ TC (3) ☒ SC (4) ☐ other (5)

(5)

(1) Essential safety requirement
(2) HC = horizontal committee
(3) N° of CEN/TC (Secretary & Chairman)
(4) EEC Standing Committee 89/392
(5) To be specified

	CO-ORDINATION OF NOTIFIED BODIES **PPE-Directive 89/686/EEC + amendments** **RECOMMENDATION FOR USE**	CNB/P/02.049 Revision 01 Language: E

Number of pages: 1	Date: 2011-05-18	Approval by : Approved on :
Origin : Vertical group 2		☒ Vertical Group 2011-05-18 ☒ Horizontal Committee 2011-09-12 ☒ Standing Committee 2012-05-15

Question related to: Annex: Article:	EN/prEN: Clause:	Other:

Key words:

Children, EN testing, CE certification

Question:

How to deal with CE certification request for Respiratory Protective Devices specially designed for children? (i.e. based on EN 149)

Solution:

The PPE directive does not exclude PPE for children.

VG2 considers that the RPD standards were not written with consideration of the requirements of children.
Certification would be possible according to just the directive.

A request for standardisation activities shall be submitted to CEN/TC 79.

Sent to: ☒ members of the VG ☐ other(s) VG ☒ HC (2) ☒ TC (3) ☒ SC (4) ☐ other (5)

(5)

(1) Essential safety requirement
(2) HC = horizontal committee
(3) N° of CEN/TC (Secretary & Chairman)
(4) EEC Standing Committee 89/392
(5) To be specified

	CO-ORDINATION OF NOTIFIED BODIES **PPE-Directive 89/686/EEC + amendments** **RECOMMENDATION FOR USE**	CNB/P/02.050 Revision 03 Language: E

Number of pages: 1	Date: 2012-04-12	Approval by : Approved on : ☒ Vertical Group 2012-04-12 ☒ Horizontal Committee 2012-12-12 ☒ Standing Committee 2013-03-12
Origin : Vertical Group 2		

Question related to: Annex: Article:	Harmonised Standard EN 140:1998 Clause: 9.3 and 8.2.6	Other:

Key words:

Marking; shelf-life; lifetime; half-masks; quarter-masks; pictogram;

Clause 9.3 requires that the instructions for use shall include the shelf-life or equivalent of the PPE.

In clause 8.2.6 a sample of an appropriate pictogram for marking the shelf-life on the package of the PPE is given.

Question:

How should PPE be marked on the package where the manufacturer does not define a finite shelf-life?

Solution:

Where the manufacturer claims an infinite shelf-life for the PPE under clause 9.3 no pictogram concerning the shelf life should occur on the package.

Sent to: ☒ members of the VG ☐ other(s) VG ☒ HC (2) ☐ TC (3) ☒ SC (4) ☐ other (5)

(5)

(1) Essential safety requirement
(2) HC = horizontal committee
(3) N° of CEN/TC (Secretary & Chairman)
(4) EEC Standing Committee 89/392
(5) To be specified

	CO-ORDINATION OF NOTIFIED BODIES **PPE-Directive 89/686/EEC + amendments** **RECOMMENDATION FOR USE**	CNB/P/02.051 Revision 01 Language: E

Number of pages: 1	2012-04-12	Approval by : Approved on : ☒ Vertical Group 2012-04-12 ☒ Horizontal Committee 2012-12-12 ☒ Standing Committee 2013-03-12
Origin :		

Question related to: Annex: Article:	EN/prEN: EN140:1998 Clause: 6.12.1	Other:

Key words:

Valves, replacement

Question:

Must valve assemblies be able to be replaced as required by clause 6.12.1?

(The wording of clauses 6.9 and 6.12.1 seem incompatible in the case of integral components of inhalation and exhalation valves.)

Solution:

No. If any components of valve assemblies are not intended by the manufacturer to be replaced, that is acceptable.

Reason:

EN 136: 1998 has corresponding requirements in clause 7.10 and clause 7.15.1, but includes additional words in clause 7.15.1 when compared to EN140:1998 clause 6.12.1 which make the requirements compatible.

This additional wording is underlined below:

"Valve assemblies shall be such that they can be readily maintained and <u>if intended by the manufacturer</u> correctly replaced."

EN140:1998 clause 6.12.1 should be read as if including the additional words.

Sent to: ☒ members of the VG ☐ other(s) VG ☒ HC (2) ☐ TC (3) ☒ SC (4) ☐ other (5)

(5)

(1) Essential safety requirement
(2) HC = horizontal committee
(3) N° of CEN/TC (Secretary & Chairman)
(4) EEC Standing Committee 89/392
(5) To be specified

	CO-ORDINATION OF NOTIFIED BODIES **PPE-Directive 89/686/EEC + amendments** **RECOMMENDATION FOR USE**	CNB/P/02.053 Revision 02 Language: E

Number of pages: 1	2015-01-28	Approval by : Approved on :
Origin : VG2 Respiratory Protective equipment		☒ Vertical Group 2012-04-12 ☒ Horizontal Committee 2015-03-12 ☒ Standing Committee 2015-10-01

Question related to: Annex: Article:	EN/prEN: 14594:2005; 13274-3:2001 Clause: 7.17.3	Other:

Key words:
Abrasive blasting, protective clothing, blasting hood

Question:
The description of the test procedure prescribes the pressure which should be set but does not mention how much blasting material should be used for the abrasive blasting test.
What mass of blasting material should be used?

Solution:
The amount of blasting material for the test period of two minutes should be 6 kg to 8 kg. Care should be taken to have a continuous flow of blasting material the test.

Sent to: ☒ members of the VG ☐ other(s) VG ☒ HC (2) ☒ TC (3) ☒ SC (4) ☐ other (5)

(5)

(1) Essential safety requirement
(2) HC = horizontal committee
(3) N° of CEN/TC (Secretary & Chairman)
(4) EEC Standing Committee 89/392
(5) To be specified

	CO-ORDINATION OF NOTIFIED BODIES **PPE-Directive 89/686/EEC + amendments** **RECOMMENDATION FOR USE**	CNB/P/02.054 Revision 02 Language: E

Number of pages: 1	Date: 2012-04-11	Approval by : Approved on :
Origin : VG2		☒ Vertical Group 2012-12-01 ☒ Horizontal Committee 2013-02-15 ☒ Standing Committee 2013-03-12

Question related to: Annex: Article:	EN/prEN: all Clause:	Other:

Key words:

Total Inward Leakage, talking passage

Question:

How should the test subject speak during TIL?

Solution:

The test subject should be instructed as follows:

"During the talking exercise, you should speak clearly and at a volume so that an adjacent colleague would be able to hear your words.

You should not introduce prolonged pauses into the speaking, except when breathing.

The exercise will require increased effort.

Whilst your breathing may follow punctuation of text, you are free to breathe more frequently.

It is not intended that you should be over-exerted and struggling to breathe during the exercise."

Sent to: ☒ members of the VG ☐ other(s) VG ☒ HC (2) ☐ TC (3) ☒ SC (4) ☐ other (5) (5)

(1) Essential safety requirement
(2) HC = horizontal committee
(3) N° of CEN/TC (Secretary & Chairman)
(4) EEC Standing Committee 89/392
(5) To be specified

	CO-ORDINATION OF NOTIFIED BODIES **PPE-Directive 89/686/EEC + amendments** **RECOMMENDATION FOR USE**	CNB/P/02.055 Revision 02 Language: E

Number of pages: 1	Date: *2012-04-12*	Approval by : Approved on :
Origin : VG2 Respiratory Protective Equipment		☒ Vertical Group 2012-04-12 ☒ Horizontal Committee 2015-03-12 ☒ Standing Committee 2015-10-01

Question related to: Annex: Article:	EN/prEN: EN14387:2004 (A1:2008) Clause: 8.3	Other:

Key words:
Marking, filter packaging

Question:
Clause 8.3 specifies “The filter package shall be marked at least with the following information:”
Upon which part of the filter package should the markings be given?

Solution:
The marking should be applied to the smallest commercially available package.
It is accepted that the smallest commercially available package is not always the most immediate packaging.

Reason:
Other standards that include similar requirements, e.g. EN 143:2000 clause 9.4, refer to marking of the smallest commercially available packaging.

Sent to: ☒ members of the VG ☐ other(s) VG ☒ HC (2) ☒ TC (3) ☒ SC (4) ☐ other (5)
(5)

(1) Essential safety requirement
(2) HC = horizontal committee
(3) N° of CEN/TC (Secretary & Chairman)
(4) EEC Standing Committee 89/392
(5) To be specified

	CO-ORDINATION OF NOTIFIED BODIES **PPE-Directive 89/686/EEC + amendments** **RECOMMENDATION FOR USE**	CNB/P/02.056 Revision 02 Language: E

Number of pages: 1	Date: 2015-01-28	Approval by : Approved on :
Origin : VG2 Respiratory protective equipment		☒ Vertical Group 2012-04-13 ☒ Horizontal Committee 2015-03-12 ☒ Standing Committee 2015-10-01

Question related to: Annex: Article:	EN/prEN: EN 14594:2005 - EN 14593:2005 Clause:	Other:

Key words: airlines; temperature conditioning; samples

Question:

The introductory paragraph and related table in the testing section of the standards EN 14594:2005 (§ 7.1, table 1), EN 14593-1:2005 (§ 6.1, table 1), EN 14593-2:2005 (§6.1, table 1) specifies that four samples will be used, two of which will not undergo the thermal conditioning and will be used for the flammability test only, while the other two will undergo the thermal conditioning and will be used for all the remaining tests.

The inward leakage test (EN 14594:2005 § 7.14.2.3.1, EN 14593-1:2005 § 6.14, EN 14593-2:2005 §6.14) requires two samples, one of which as received and the other one after the thermal conditioning. The text related to the inward leakage test appears to be inconsistent with the rest of the standards.

Which test conditions may be applied?

Solution:

EN 14594:2005 (§ 7.1, table 1),

EN 14593-1:2005 (§ 6.1, table 1),

EN 14593-2:2005 (§6.1, table 1).

Sent to: ☒ members of the VG ☐ other(s) VG ☒ HC (2) ☒ TC (3) ☒ SC (4) ☐ other (5)

(5)

(1) Essential safety requirement
(2) HC = horizontal committee
(3) N° of CEN/TC (Secretary & Chairman)
(4) EEC Standing Committee 89/392
(5) To be specified

	CO-ORDINATION OF NOTIFIED BODIES **PPE-Directive 89/686/EEC + amendments** **RECOMMENDATION FOR USE**	CNB/P/02.057 Revision 02 Language: E

Number of pages: 1	2015-01-28	Approval by : Approved on :
Origin : VG2 Respiratory Protective equipment		☒ Vertical Group 2012-04-12 ☒ Horizontal Committee 2015-03-12 ☒ Standing Committee 2015-10-01

Question related to: Annex: Article:	EN/prEN: 14594:2005; 13274-3:2001 Clause: 7.17.3	Other:

Key words:
Breathing resistance, Exhalation resistance, Continuous flow compressed air line breathing apparatus

Question:
Which could be the reasons to measure the inhalation resistance of a continuous flow compressed air line breathing apparatus according to EN 13274-3, Method 2: setting E [(25 x 2) l/min] and the exhalation resistance according to EN 13274-3, Method 2: setting H [(40 x 2,5) l/min]?
In EN 139 which is superseded by EN 14594 both, the inhalation and the exhalation resistance were measured at a setting of (25 x 2) l/min. The test device used in the measurement of breathing resistance (figure 7 in EN 14594) is designed for a sinusoidal flow of (25 x 2) l/min.

Solution:
A: No reasons evident;
Both, inhalation and exhalation resistance should be measured according to EN 13274-3,
Method 2: setting E [(25 x 2) l/min]

Sent to: ☒ members of the VG ☐ other(s) VG ☒ HC (2) ☒ TC (3) ☒ SC (4) ☐ other (5)
(5)

(1) Essential safety requirement
(2) HC = horizontal committee
(3) N° of CEN/TC (Secretary & Chairman)
(4) EEC Standing Committee 89/392
(5) To be specified

	CO-ORDINATION OF NOTIFIED BODIES **PPE-Directive 89/686/EEC + amendments** **RECOMMENDATION FOR USE**	CNB/P/02.058 Revision 01 Language: E

Number of pages: 1	Date: 2014-04-10	Approval by : Approved on : ☒ Vertical Group .....2014-04-10 ☒ Horizontal Committee.....2015-03-12 ☒ Standing Committee.....2015-10-01
Origin: VG2		

Question related to: Annex: Article:	EN/prEN: Clause:	Other:

Key words: Reporting, Test results

Question:
Is it necessary to report measurement values in addition to reporting the assessment for each clause?

Solution:
Yes.

The values used to determine the assessment should be reported.

Sent to: ☒ members of the VG ☐ other(s) VG ☒ HC (2) ☐ TC (3) ☒ SC (4) ☐ other (5)

(3): (5):

(1) Essential safety requirement
(2) HC = horizontal committee
(3) N° of CEN/TC (Secretary & Chairman)
(4) EEC Standing Committee 89/392
(5) To be specified

	CO-ORDINATION OF NOTIFIED BODIES **PPE-Directive 89/686/EEC + amendments** **RECOMMENDATION FOR USE**	CNB/P/02.059 Revision 01 Language: E

Number of pages: 1	Date: 2014-04-10	Approval by : Approved on : ☒ Vertical Group .....2014-04-10 ☒ Horizontal Committee.....2015-03-12 ☒ Standing Committee.....2015-10-01
Origin: VG2		

Question related to: Annex: Article:	EN/prEN: EN 137 : 2006 Clause: 7.4.1.1 & 7.4.1.2	Other:

Key words: Resistance to temperature

Question:

In the case of apparatus incorporating wrapped composite pressure vessels, does the storage time of 12 hours apply to the whole apparatus, or just to the cylinder(s)?

Solution:

The storage time applies to the whole apparatus.

Sent to: ☒ members of the VG ☐ other(s) VG ☒ HC (2) ☐ TC (3) ☒ SC (4) ☐ other (5)

(3): (5):

(1) Essential safety requirement
(2) HC = horizontal committee
(3) N° of CEN/TC (Secretary & Chairman)
(4) EEC Standing Committee 89/392
(5) To be specified

	CO-ORDINATION OF NOTIFIED BODIES **PPE-Directive 89/686/EEC + amendments** **RECOMMENDATION FOR USE**	CNB/P/02.060 Revision 01 Language: E

Number of pages: 1	Date: 2014-04-10	Approval by : Approved on : ☒ Vertical Group .....2014-04-10 ☒ Horizontal Committee.....2015-03-12 ☒ Standing Committee.....2015-10-01
Origin: VG2		

Question related to: Annex: Article:	EN/prEN: EN 137 : 2006 Clause: 6.11.1	Other:

Key words: Temperature performance

Question:

If the apparatus conforms to the requirements for breathing resistance, can other defects result in the apparatus being considered to have malfunctioned and therefore not to have operated 'trouble-free'?

Solution:

Yes.

If the warning device activates during the test at pressures above the normal expected activation pressure, the apparatus should be considered to have malfunctioned and therefore not to have operated 'trouble free'.

If leaks are detectable (even by hand), the apparatus should be considered to have malfunctioned and therefore not to have operated 'trouble-free'.

This is not intended as an exhaustive list as other malfunctions may be observed that are symptomatic of the apparatus not operating 'trouble-free'.

Sent to: ☒ members of the VG ☐ other(s) VG ☒ HC (2) ☐ TC (3) ☒ SC (4) ☐ other (5)

(3): (5):

(1) Essential safety requirement
(2) HC = horizontal committee
(3) N° of CEN/TC (Secretary & Chairman)
(4) EEC Standing Committee 89/392
(5) To be specified

	CO-ORDINATION OF NOTIFIED BODIES **PPE-Directive 89/686/EEC + amendments** **RECOMMENDATION FOR USE**	CNB/P/02.061 Revision 01 Language: E

Number of pages: 1	Date: 2014-04-10	Approval by : Approved on : ☒ Vertical Group .....2014-04-10 ☒ Horizontal Committee.....2015-03-12 ☒ Standing Committee.....2015-10-01
Origin: VG2		

Question related to: Annex: Article:	EN/prEN: EN 149:2001 + A1:2009 and EN1827:1999 + A1:2009 Clause:	Other:

Key words: Choice of standard

Question:

Are there situations in which both EN149 or EN1827 could be considered an appropriate choice of standard?

Solution:

When taking into account the scope and description of EN149 and EN1827, in the circumstance that all of the following apply, both standards could be considered appropriate:

The mask consists substantially, but not entirely, of filter material
The mask does not include inhalation valves.
The mask includes a re-usable frame/grid to hold the filter
The harness is attached to the re-usable frame/grid
The filter protects against particles only
The filters are separable from the re-usable frame/grid
The filters are replaceable
The filters are designed for a maximum of single shift use.

It should be noted that the filter may or may not form the primary seal against the face and exhalation valve(s) may or may not be included.

Whichever standard is chosen, the product shall satisfy all of the relevant requirements of the chosen standard.

Sent to: ☒ members of the VG ☐ other(s) VG ☒ HC (2) ☐ TC (3) ☒ SC (4) ☐ other (5)

(3): (5):

(1) Essential safety requirement
(2) HC = horizontal committee
(3) N° of CEN/TC (Secretary & Chairman)
(4) EEC Standing Committee 89/392
(5) To be specified

	CO-ORDINATION OF NOTIFIED BODIES **PPE-Directive 89/686/EEC + amendments** **RECOMMENDATION FOR USE**	CNB/P/02.062 Revision 00 Language: E

Number of pages: 1	Date: *April 2015*	Approval by : Approved on :
Origin : VG2		☒ Vertical Group 20/04/2016 ☒ Horizontal Committee 28/07/2016 ☒ Standing Committee 02/11/2016

Question related to: Annex: Article:	EN/prEN: EN 143:2001/A1:2006 Clause:	Other:

Key words:
Filter, clogging, penetration test

Question:
In EN143 after the clogging test the penetration test has to be performed. In the standard it is not clear what the testing time is.
a) test until 120 mg loading of aerosol (NaCl and paraffin oil)
b) or the penetration is measured as the average over a time of (30±3)s, 3 min after the start of the test

When and how long should the penetration be measured?

Solution:
The penetration after the clogging is measured as the average over a time of (30±3)s, 3 min after the start.
The penetration test before the clogging is measured until 120 mg loading of aerosol. So after the clogging it is sufficient to measure the penetration for three minutes.

Sent to: ☒ members of the VG ☐ other(s) VG ☒ HC (2) ☒ TC (3) ☒ SC (4) ☐ other (5)

(1) Essential safety requirement
(2) HC = horizontal committee
(3) N° of CEN/TC (Secretary & Chairman)
(4) EEC Standing Committee 89/392
(5) To be specified

	CO-ORDINATION OF NOTIFIED BODIES **PPE-Directive 89/686/EEC + amendments** **RECOMMENDATION FOR USE**	CNB/P/02.063 Revision 00 Language: E

Number of pages: 1	Date: *April 2015*	Approval by : Approved on :
Origin : VG2		☒ Vertical Group 20/04/2016 ☒ Horizontal Committee 28/07/2016 ☒ Standing Committee 02/11/2016

Question related to: Annex: Article:	EN/prEN: 14387:2008 Clause: 1	Other:

Key words:
Carbon Monoxide Filter Marking

Question:

Is it possible to have a mixed marking of multi-type gas filters according to EN 14387 including a Carbon monoxide (CO) marking according to another standard than EN 14387?

Solution:
EN 14387 states the Scope "Filters for use against CO are excluded from this standard."
A mixed marking is not possible.

An additional, clearly separated marking on the filter is possible.

Sent to: ☒ members of the VG ☐ other(s) VG ☒ HC (2) ☒ TC (3) ☒ SC (4) ☐ other (5)

(1) Essential safety requirement
(2) HC = horizontal committee
(3) N° of CEN/TC (Secretary & Chairman)
(4) EEC Standing Committee 89/392
(5) To be specified

	CO-ORDINATION OF NOTIFIED BODIES **PPE-Directive 89/686/EEC + amendments** **RECOMMENDATION FOR USE**	CNB/P/02.064 Revision 01 Language: E

Number of pages: 1	Date: *April 2015*	Approval by : Approved on :
Origin : VG2		☒ Vertical Group 20/04/2016 ☒ Horizontal Committee 28/07/2016 ☒ Standing Committee 02/11/2016

Question related to: Annex: Article:	EN/prEN: EN 143:2001/A1:2006 Clause: § 7.13, § 7.13.1 & 7.13.2	Other:

Key words:
particle filter, clogging

Question:
According to EN 143:2001 filter penetration after clogging with dolomite requires four samples for each test aerosol. In order to be in line with EN 143:2001/A1:2006, three samples for each aerosol should be enough.
Do we need to test 4 samples?
Moreover, as EN 143:2001/A1:2006 includes exposure tests with NaCl and paraffin oil mist, only breathing resistance should be tested after clogging. This change is in accordance with the modification of EN 143 proposed by Working Group 4 of the Technical Committee 79 of the European Committee for Standardization (CEN/TC 79/WG 4).

Solution:

Regarding the clogging test. 3 samples shall be tested after conditioning acc. to EN 143 clauses 8.3 Mechanical strength (M.S.)) and 8.4 Temperature conditioning (T.C.). Test only breathing resistance after clogging.

Sent to: ☒ members of the VG ☐ other(s) VG ☒ HC (2) ☒ TC (3) ☒ SC (4) ☐ other (5)

(1) Essential safety requirement
(2) HC = horizontal committee
(3) N° of CEN/TC (Secretary & Chairman)
(4) EEC Standing Committee 89/392
(5) To be specified

Vertical Recommendation for Use sheets (RfUs)
of Vertical Group 3 "Eye and Face Protection"
of the European Coordination of Notified Bodies in the field of PPE

Number of RfU	Revision	Reference	Keywords	Approved by Vertical Group 3	Approved by Horizontal Committee	Approved by PPE Expert Group
03.002	03	EN 166, Clause: 7.1.4 and 7.2.2	Minimum robustness, increased robustness, high speed particle impact	01/04/2004	15/06/2011	15/05/2012
03.003	03	EN 167, Clause: 6	Transmittance, uncertainty	20/06/1994		15/12/2005
03.004	03	EN 170, table 1	Transmittance, band width, scanning speed	20/06/1994		15/12/2005
03.009	03	EN 166, Clause: 7.2.6	Damage by fine particles, sand, reference lenses	30/11/2006	15/06/2011	15/05/2012
03.010	03	EN 166, 167, 168, Clause: all	Paint ball	30/11/2006	15/06/2011	15/05/2012
03.011	02	EN 175	Samples, welding protection	15/04/1996		15/12/2005
03.012	02	EN 166, EN 168 article 13	Large dust particles	08/10/2002		15/12/2005
03.013	03	EN 167, Clause 3.2.2	Refractive power, laser, achromatic lens	20/06/1994		15/12/2005
03.018	02	EN 166 - EN 1836, Clause: EN 166 § 7.3.3 and EN 1836-A2 § 4.1.4	Reflectance	30/11/2006	15/06/2011	15/05/2012
03.019	02	89/686/ECC, Article 1 & 2	Clip on lenses, component	30/11/2006	15/06/2011	15/05/2012
03.020	02	EN 166: 2001, Clause: 7.3.4	Protection against high speed particle at extremes of temperature	30/11/2006	15/06/2011	15/05/2012
03.021	03	EN 175: 1997, Clause: 5.5	Resistance of welder's shield to damage when dropped	24/11/2010	15/06/2011	15/05/2012
03.022	02	EN 166: 2001, Clause: 7.3.1, 7.3.2	Resistance to surface damage by fine particles – Resistance to fogging - Marking	24/11/2010	15/06/2011	15/05/2012
03.023	01	EN 207	Laser Protection filters made of glass; scale number	24/11/2010	15/06/2011	15/05/2012
03.024	05	EN 166, Clause: 7.2.7	Eye and face protection against electrical arc; additional requirements	24/02/2012	11/10/2012	12/03/2013
03.025	03	PPE-Directive 89/686/EEC, Annex II, Article 2.12	Eye- and face protection against thermal effects by electric arc; Marking	24/02/2012	11/10/2012	12/03/2013
03.026	00	EN 166:2001, clause 7.1.2.2.2	Goggles, face shields, housings, filtering action, transmittance	25/06/2015	15/01/2016	29/04/2016

Vertical Recommendation for Use sheets (RfUs)
of Vertical Group 3 "Eye and Face Protection"
of the European Coordination of Notified Bodies in the field of PPE

Number of RfU	Revision	Reference	Keywords	Approved by Vertical Group 3	Approved by Horizontal Committee	Approved by PPE Expert Group
03.027	00	EN 166:2001	Goggle	25/06/2015	15/01/2016	29/04/2016
03.028	00	EN 166:2001, clause 7.1.2.2.2	Housing transmittance	25/06/2015	15/01/2016	29/04/2016
03.029	00	EN 166:2001, clause 10 g	Information, spare parts, accessories	25/06/2015	15/01/2016	29/04/2016
03.030	00	EN 207:2009 / AC:2011	EC examination, lasers eyewear, filters	25/06/2015	15/01/2016	29/04/2016

Note: Recommendation for Use sheets which deal with withdrawn and / or superseded standards and which no longer apply to new certifications are published as reference for previous files.

	CO-ORDINATION OF NOTIFIED BODIES PPE-Directive 89/686/EEC + amendments RECOMMENDATION FOR USE	CNB/P/03.002 Revision 03 Language : E

Number of pages : 1	Date : 01/03/2004	Approval by :	Approved on :
Origin : VG3 Eye and Face Protection		☑ Vertical Group	.....01/04/2004
		☑ Horizontal Committee	.....15/06/2011
		☑ Standing Committee	.....15/05/2012

Question related to :	EN/prEN : EN 166	Other :
Annex : Article :	Clause : 7.1.4 and 7.2.2	

Key words : Minimum robustness, increased robustness, high speed particle impact

Question :

How to check that “no more than 5 mg of the ocular material becomes detached from the surface away from the one in contact or struck by the ball” ?

Solution:

1) Recovery of all detached lenses material for weighing seems impractical.
2) Calculate the material detached by difference of weight of the eye-protector is not adequate for determining mg.

For both, it could also take into account material detached from another part of the eye protector, and declare the equipment no conform, even though no material is detached from the ocular.

A practical solution is that no lens material should become detached from the surface away from the one in contact or struck by the ball and to access that by visual inspection.

Sent for information to : ☑ members of the VG ☐ other(s) VG ☑ HC (2) ☑ TC (3) ☑ SC (4) ☐ other (5)

(1) Essential safety requirement
(2) HC = horizontal committee
(3) N° of CEN/TC (Secretary & Chairman)
(4) EEC Standing Committee 89/392
(5) To be specified

	CO-ORDINATION OF NOTIFIED BODIES PPE-Directive 89/686/EEC + amendments RECOMMENDATION FOR USE	CNB/P/03.003 Revision 03 Language : E

Number of pages : 1	Date : 21/04/2006	Approval by :	Approved on :
Origin : VG3 Eye and Face Protection		☑ Vertical Group	.....20/06/1994
		☐ Horizontal Committee	.....
		☑ Standing Committee	.....15/12/2005

Question related to : Annex : Article :	EN/prEN : EN 167 Clause : 6	Other :

Key words : transmittance, uncertainty

Question :

Transmittance measurements :

Has the relative uncertainly on the transmittance value to be calculated on the value of the measure or on the maximum value of the range of values in which the measure is carried out ?

Solution :

The relative uncertainly which is applicable to a measured transmittance value in the one which corresponds to the maximum value of the range of values in which the measure is carried out accordingly with table n° 1 of EN 167.

Sent for information to : ☐ members of the VG ☐ other VG(s) ☐ HC (2) ☐ TC (3) ☐ SC (4) ☐ other (5)

(1) Essential safety requirement
(2) HC = horizontal committee
(3) N° of CEN/TC (Secretary & Chairman)
(4) EEC Standing Committee 89/392
(5) To be specified

	CO-ORDINATION OF NOTIFIED BODIES PPE-Directive 89/686/EEC + amendments RECOMMENDATION FOR USE	CNB/P/03.004 Revision 03 Language : E

Number of pages : 1	Date : 21/04/2006	Approval by :	Approved on :
Origin : VG3 Eye and Face Protection		☑ Vertical Group	.....20/06/1994
		☐ Horizontal Committee	.....
		☑ Standing Committee	.....15/12/2005

Question related to :	EN/prEN : EN 170	Other :
Annex : Article :	Clause : Table 1	

Key words :

transmittance, band with, scanning speed

Question :

Transmittance measurements :

- for 210 mm < λ < 313 mm, the maximum transmittance value does not exceed 3.10^{-4}. Depending on the scanning speed and the wawe range with used, the results are not always the same (especially for the sharp peaks) which can exceed 3.10^{-4} or not. What are the spectrophotometer settings to apply ?

Solution :

- Measure so slowly that a further reduction of speed does not change the result. Better : stop at the wavelength to be measured.

- Reduce spectral band which until a further reduction does not change the results.

Sent for information to : ☐ members of the VG ☐ other VG(s) ☐ HC (2) ☐ TC (3) ☐ SC (4) ☐ other (5)

(1) Essential safety requirement
(2) HC = horizontal committee
(3) N° of CEN/TC (Secretary & Chairman)
(4) EEC Standing Committee 89/392
(5) To be specified

	CO-ORDINATION OF NOTIFIED BODIES PPE-Directive 89/686/EEC + amendments RECOMMENDATION FOR USE	CNB/P/03.009 Revision 03 Language : E

Number of pages : 1	Date : 21/04/2006	Approval by :	Approved on :
Origin : VG3 Eye and Face Protection		☑ Vertical Group	.....30/11/2006
		☑ Horizontal Committee	.....15/06/2011
		☑ Standing Committee	.....15/05/2012

Question related to : Annex : Article :	EN/prEN : EN 166 Clause : 7.2.6	Other :

Key words : damage by fine particles, sand, reference lenses

Question :

Choice of the reference (sand and lenses) used to measure the resistance to damage by fine particles ?

Solution :

- Sand Reference “P 0,5 to 0,7” supplied by :

  BUSCH QUARTZ GmbH
  Galgenbühlstr 9
  92253 SCHNAITTENBACH 8454 (Germany)
  Tel. (49) 96 221 761
  Fax (49) 96 224 689

- Reference lenses supplied by :

  DESAG 31073 GRÜNENPLAN (Germany)
  Tel. (49) 51 87 771 315

Sent for information to : ☑ members of the VG ☐ other VG(s) ☑ HC (2) ☐ TC (3) ☑ SC (4) ☐ other (5)

(1) Essential safety requirement
(2) HC = horizontal committee
(3) N° of CEN/TC (Secretary & Chairman)
(4) EEC Standing Committee 89/392
(5) To be specified

	CO-ORDINATION OF NOTIFIED BODIES PPE-Directive 89/686/EEC + amendments RECOMMENDATION FOR USE	CNB/P/03.010 Revision 03 Language : E

Number of pages : 1	Date : 21/04/2006	Approval by :	Approved on :
Origin : VG3 Eye and Face Protection		☑ Vertical Group	.....30/11/2006
		☑ Horizontal Committee	.....15/06/2011
		☑ Standing Committee	.....15/05/2012

Question related to : Annex : Article :	EN/prEN : EN 166, 167, 168 Clause : All	Other :

Key words : paint ball

Question :

What are the test to carry out on the paint ball eye protectors ?

Solution :

A paint ball protectors can be assimilate to a face shield. The tests to carry out are the ones which are defined in EN 166 - EN 167 - EN 168 for this type of eye protectors and for resistance to high speed particles specification (medium energy - 120 m/s).

Verifying impact test could be also performed, using the paint ball gun and paint balls at a very short distance of the face shield.

Sent for information to : ☑ members of the VG ☐ other VG(s) ☑ HC (2) ☐ TC (3) ☑ SC (4) ☐ other (5)

(1) Essential safety requirement
(2) HC = horizontal committee
(3) N° of CEN/TC (Secretary & Chairman)
(4) EEC Standing Committee 89/392
(5) To be specified

	CO-ORDINATION OF NOTIFIED BODIES PPE-Directive 89/686/EEC + amendments RECOMMENDATION FOR USE	CNB/P/03.011 Revision 02 Language : E

Number of pages : 1	Date : 21/04/2006	Approval by :	Approved on :
Origin : VG3 Eye and Face Protection		☑ Vertical Group	.....15/04/1996
		☐ Horizontal Committee	.....
		☑ Standing Committee	.....15/12/2005

Question related to :	EN/prEN : EN 175	Other :
Annex : Article :	Clause : All	

Key words :

samples, welding protection

Question :

What sample quantities should be used when testing to those standards for which no sample quantities are detailed ?

e.g. pr EN 175 - "Personal protection - Equipment for eye and face protection during welding and allied processes"

Solution :

Make reference to similar requirements in EN 166

In the cases where similar requirements do not exist, e.g. "Electrical insulation", assess three samples

Sent for information to : ☐ members of the VG ☐ other VG(s) ☐ HC (2) ☐ TC (3) ☐ SC (4) ☐ other (5)

(1) Essential safety requirement
(2) HC = horizontal committee
(3) N° of CEN/TC (Secretary & Chairman)
(4) EEC Standing Committee 89/392
(5) To be specified

	CO-ORDINATION OF NOTIFIED BODIES PPE-Directive 89/686/EEC + amendments RECOMMENDATION FOR USE	CNB/P/03.012 Revision 02 Language : E

Number of pages : 1	Date : 21/04/2006	Approval by :	Approved on :
Origin : VG3 Eye and Face Protection		☑ Vertical Group	.....08/10/2002
		☐ Horizontal Committee	.....
		☑ Standing Committee	.....15/12/2005

Question related to :	EN/prEN : EN 166- EN 168	Other :
Annex : Article :	Clause : EN 168 article 13	

Key words :

Large dust particles

Question :

In conclusion of the round robin test concerning the test of protection against large dust particles, this sheet give some explanations concerning the test method and propose some modifications.

Solution :

1- Direction of the air flow in dust chamber : upwards (EN 168 § 13-1-1)

2- The reference of the suitable agitator must be deleted (EN 168 § 13-1-1)

3- A suitable blotting paper is one that has a minimum water absorptivity of 2.0 g/dm2. This measurement is made after the removal of excess water following one of the two methods bellow :
   - squeezing the paper with a roller,
   - hanging up the paper to drip about 5 minutes.

   It is considered that there is no more excess of water when, if the paper is hanging up, no droplets are falling within the 60 seconds.

4- Before the first reflectance measurement of the blotting paper (EN 168 § 13-2), the excess of water must be removed (see above)

5- As it is impossible to quantify directly the amount of coal dust circulating within the chamber, the reflectance of the blotting paper outside the goggle has to be measured after the test. This could be done on a second piece of blotting paper, attached vertically on the headform or on any support near the headform (EN 168 § 13-2). A reflectance value of less than 30% would appear to indicate when sufficient coal dust is circulating. The numerical value of the air flow (2.8 m3/min) and pressure (2250Pa) are only indicative (EN 168 § 13-1-1).

Sent for information to : ☐ members of the VG ☐ other VG(s) ☐ HC (2) ☐ TC (3) ☐ SC (4) ☐ other (5)

(1) Essential safety requirement
(2) HC = horizontal committee
(3) N° of CEN/TC (Secretary & Chairman)
(4) EEC Standing Committee 89/392
(5) To be specified

	CO-ORDINATION OF NOTIFIED BODIES PPE-Directive 89/686/EEC + amendments RECOMMENDATION FOR USE	CNB/P/03.013 Revision 03 Language : E

Number of pages : 1	Date : 21/04/2006	Approval by :	Approved on :
Origin : VG3 Eye and Face Protection		☑ Vertical Group	.....20/06/1994
		☐ Horizontal Committee	.....
		☑ Standing Committee	.....15/12/2005

Question related to : Annex : Article :	EN/prEN : EN 167 Clause : 3.2.2	Other :

Key words :

Refractive power, laser, achromatic lens

Question :

- If the light source is a laser, is it still necessary to use an achromatic lens ? (It seems unnecessary)

Solution :

- ILEE group agrees that it is not necessary.

Sent for information to : ☐ members of the VG ☐ other VG(s) ☐ HC (2) ☐ TC (3) ☐ SC (4) ☐ other (5)

(1) Essential safety requirement
(2) HC = horizontal committee
(3) N° of CEN/TC (Secretary & Chairman)
(4) EEC Standing Committee 89/392
(5) To be specified

	CO-ORDINATION OF NOTIFIED BODIES PPE-Directive 89/686/EEC + amendments RECOMMENDATION FOR USE	CNB/P/03.018 Revision 02 Language : E

Number of pages : 1	Date : 01/04/2004	Approval by :	Approved on :
Origin : VG3 Eye and Face Protection		☑ Vertical Group	.....30/11/2006
		☑ Horizontal Committee	.....15/06/2011
		☑ Standing Committee	.....15/05/2012

Question related to :	EN/prEN : EN 166- EN1836	Other :
Annex : Article :	Clause : EN 166 §7.3.3 and EN 1836-A2 § 4.1.4	

Key words :

Reflectance

Question :

- Oculars with enhanced reflectance in the infrared (EN 166) and eye side reflectance (EN 1836) : Is it specular or total reflectance?

Solution :

Total reflectance

Sent for information to : ☑ members of the VG ☐ other(s) VG ☑ HC (2) ☑ TC (3) ☑ SC (4) ☐ other (5)

(1) Essential safety requirement
(2) HC = horizontal committee
(3) N° of CEN/TC (Secretary & Chairman)
(4) EEC Standing Committee 89/392
(5) To be specified

	CO-ORDINATION OF NOTIFIED BODIES PPE-Directive 89/686/EEC + amendments RECOMMENDATION FOR USE	CNB/P/03.019 Revision 02 Language : E

Number of pages : 1	Date : 01/04/2004	Approval by :	Approved on :
Origin : VG3 Eye and Face Protection		☑ Vertical Group	.....30/11/2006
		☑ Horizontal Committee	.....15/06/2011
		☑ Standing Committee	.....15/05/2012

Question related to : Directive 89/686/EEC	EN/prEN :	Other :
Annex : Article : 1 § 2	Clause :	

Key words :

Clip on lenses, component

Question :

- To what must the EC-type-examination certificate refer to, when a manufacturer of an eye protector (protective goggle) intends the use of Clip-on-lenses?

Solution :

"Clip on lenses" are components of the eye protector, in the aim of directive 89/686/EEC article 1 §2.
So, relevant tests must be carry out by the test house, and an EC certificate must be issued.

Its technical file and Instructions for users shall include a list of all eye protectors the clip-on lenses are designed to be used with / attached to. Notified Body delivering its CE certificate shall verify the performances of such combinations.

The EC type-examination should reference the standards / specification used as a reference to make sure that the combination complies with the Directive and the combinations certified, i.e. those satisfactorily tested.

Sent for information to : ☑ members of the VG ☐ other(s) VG ☑ HC (2) ☑ TC (3) ☑ SC (4) ☐ other (5)

(1) Essential safety requirement
(2) HC = horizontal committee
(3) N° of CEN/TC (Secretary & Chairman)
(4) EEC Standing Committee 89/392
(5) To be specified

	CO-ORDINATION OF NOTIFIED BODIES PPE-Directive 89/686/EEC + amendments RECOMMENDATION FOR USE	CNB/P/03.020 Revision 02 Language : E

Number of pages : 1	Date : 13/10/2006	Approval by :	Approved on :
Origin : VG3 Eye and Face Protection		☑ Vertical Group	.....30/11/2006
		☑ Horizontal Committee	.....15/06/2011
		☑ Standing Committee	.....15/05/2012

Question related to :	EN/prEN : EN 166 : 2001	Other :
Annex : Article :	Clause : §7.3.4	

Key words :

Protection against high speed particle at extremes of temperature

Question :

- Where an eye protector is tested against and meets the requirements of EN166:2001 clause 7.3.4 "*Protection against high speed particles at extremes of temperature*", in your view is it also necessary to test against and satisfy the requirements of EN166 clause 7.2.2 "*Protection against high speed particles*" in order to mark the eye protector with FT, BT or AT as appropriate?

Solution :

- No, it's not necessary. If protectors pass the high-speed particles test at 55°C and -5°C, they also resist at ambient temperature.

Sent for information to : ☑ members of the VG ☐ other(s) VG ☑ HC (2) ☑ TC (3) ☑ SC (4) ☐ other (5)

(1) Essential safety requirement
(2) HC = horizontal committee
(3) N° of CEN/TC (Secretary & Chairman)
(4) EEC Standing Committee 89/392
(5) To be specified

	CO-ORDINATION OF NOTIFIED BODIES PPE-Directive 89/686/EEC + amendments RECOMMANDATION FOR USE	CNB/P/03.021 Revision 03 Language : E

Number of pages : 1	Date : 2010-11-29	Approval by :	Approved on :
Origin : VG3 Eye and Face Protection		☑ Vertical Group	.....24/11/2010
		☑ Horizontal Committee	.....15/06/2011
		☑ Standing Committee	.....15/05/2012

Question related to : Annex : Article :	EN/prEN : EN 175 : 1997 Clause : § 5.5	Other :

Key words :

Resistance of welder's shield to damage when dropped

Question :

How to interpret the clause 5.5. Resistance of welder's shields to damage when dropped of EN 175? The last sentence says: "Also the filter and cover/backing ocular(s) shall not suffer permanent damage likely to affect performance"

Problem :

If the welder's shield is equipped with glass filter it is most likely that the filter will break into pieces and the mask fails the test according to the clause. But there is no requirement that welding filters or backing/cover plates must resist to damage when dropped when they are tested separately, the minimal requirement is minimum robustness.

Decision of VG3 (2010-11-24):
The aim of this test is to verify that the face shield resists to drop test and keeps the oculars in correct position : So the test is carried out with oculars. It is not a fail if the glass filters will break.

Solution :
EN 175 must be amended as follows:

- the test is carried out with oculars. It is not a fail if the glass filters will break.

Next EN 175 revision will take into account this amendment. CEN TC 85/WG4 will receive this comment from WG4 convenor.

Sent for information to : ☑ members of the VG ☐ other(s) VG ☑ HC (2) ☑ TC (3) ☑ SC (4) ☐ other (5)

(1) Essential safety requirement
(2) HC = horizontal committee
(3) N° of CEN/TC (Secretary & Chairman)
(4) EEC Standing Committee 89/392
(5) To be specified

	CO-ORDINATION OF NOTIFIED BODIES PPE-Directive 89/686/EEC + amendments RECOMMANDATION FOR USE	CNB/P/03.022 Revision 02 Language : E

Number of pages : 1	Date : 2010-11-29	Approval by :	Approved on :
Origin : VG3 Eye and Face Protection		☑ Vertical Group	.....24/11/2010
		☑ Horizontal Committee	.....15/06/2011
		☑ Standing Committee	.....15/05/2012

Question related to : Annex : Article :	EN/prEN : EN 166 : 2001 Clause : § 7.3.1 and § 7.3.2	Other :

Key words :

Resistance to surface damage by fine particles – Resistance to fogging - Marking

Question :

Is it acceptable to have anti-fogging and/or anti-scratch coatings only on one face of the ocular (example : anti-fogging on the internal face, anti-scratch on the external face) ? What is the relevant marking ?

Solution :

Yes. The marking will include the “K” and “N” symbols, but the information for users should clearly explain these limits, for example giving the precision that “anti-fogging coating is only on internal face of the ocular and anti-scratch coating is only on the external face”.

It could be more information in addition to the information for users, for example a sticker or marking with "anti-fog-side" on the internal face and a sticker or marking with "anti-scratch-side" on the external face.

Sent for information to : ☑ members of the VG ☐ other(s) VG ☑ HC (2) ☑ TC (3) ☑ SC (4) ☐ other (5)

(1) Essential safety requirement
(2) HC = horizontal committee
(3) N° of CEN/TC (Secretary & Chairman)
(4) EEC Standing Committee 89/392
(5) To be specified

	CO-ORDINATION OF NOTIFIED BODIES PPE-Directive 89/686/EEC + amendments RECOMMENDATION FOR USE	Draft CNB/P/03.023 Revision 01 Language : E

Number of pages : 1	Date : 2010-11-29	Approval by :	Approved on :
Origin : Committee of German Notified Bodies (Eye and face protection)		☑ Vertical Group ..... ☑ Horizontal Committee ..... ☑ Standing Committee	……24/11/2010 .....15/06/2011 .....15/05/2012

Question related to :	EN/prEN : EN 207	Other :
Annex : Article :	Clause :	

Key words :

Laser protection filters made of glass; scale number

Question :

There is experimental evidence that laser protection filters made of glass don`t resist a laser capacity with C O2 – Laser to protection scale number 10600 I LB6 according to the requirements of EN 207:2009. Shall the protection scale number for laser protection filters be limited to a maximum scale of 10600 DI LB5?

Solution :

Laser protection filters made of glass intended to protect against laser radiation at 10600 nm CO2-Laser shall, as long as they do not provide a specially designed reflection coating that inhibits or reduces the impact of the laser radiation into the filter material, not be assessed to a protection scale number higher than 10600 DI LB5 in accordance to EN207:2009.

Sent for information to : ☑ members of the VG 3 ☐ other(s) VG ☑ HC (2) ☑ TC 85 (3) ☑ SC (4) ☐ other (5)

(1) Essential safety requirement
(2) HC = horizontal committee
(3) N° of CEN/TC (Secretary & Chairman)
(4) EEC Standing Committee 89/392
(5) To be specified

	CO-ORDINATION OF NOTIFIED BODIES PPE-Directive 89/686/EEC + amendments RECOMMANDATION FOR USE	Draft CNB/P/03.024 Revision 05 Language : E

Number of pages : 1	Date : 2012-02-07	Approval by :	Approved on :
Origin : Committee of German Notified Bodies (Eye and face protection)		☒ Vertical Group	2012-02-24
		☒ Horizontal Committee	2012-10-11
		☒ Standing Committee	2013-03-12

Question related to : Directive 89/686/EEC	EN/prEN : EN 166	Other :
Annex : II Article : 3.6	Clause : 7.2.7	

Key words :

Eye and face protection against electrical arc; additional requirements

Question :

How must be the proof of the thermal protection, in connection with the judgement of sufficient Light transmission requirements as an addition to paragraph 7.2.7, EN 166, to fulfil the protective aims of appendix II, paragraph 3.6.1, directive 89 / 686 / EEC?

Solution :

In addition to EN 166, the test principles GS-ET-29 (2011-05)* „Supplementary requirements for testing and certification of face shields for electrical works“ shall be used as a standard for EC-type examination.

Note: Alternative methods can be used when they are available and when they fulfil the essential requirements of the PPE Directive 89/868/EEC.

* German test principles written by: Expert Committee for electrical engineering, Test- and Certification body at DGUV-TEST.;

Sent for approval to : ☒ members of the VG 3 ☐ other(s) VG ☒ HC (2) ☐ TC 85 (3) ☒ SC (4) ☐ ISO TC94/SC6 (5)

(1) Essential safety requirement
(2) HC = horizontal committee
(3) N° of CEN/TC (Secretary & Chairman)
(4) EEC Standing Committee 89/392
(5) To be specified

	CO-ORDINATION OF NOTIFIED BODIES PPE-Directive 89/686/EEC + amendments RECOMMANDATION FOR USE	CNB/P/03.025 Revision 03 Language : E

Number of pages : 1	Date : 2012-02-07	Approval by :	Approved on :
Origin : Committee of German Notified Bodies (Eye and face protection)		☒ Vertical Group	2012-02-24
		☒ Horizontal Committee	2012-10-11
		☒ Standing Committee	2013-03-12

Question related to : PPE-Directive 89/686/EEC	EN/prEN :	Other :
Annex : II Article : 2.12	Clause :	

Key words :

Eye- and face protection against thermal effects by electric arc; Marking

Question :

Should the suitability for “live working” be marked on Eye- and face protectors against thermal effects by electric arc?

Solution :

Yes.
EN 166 expresses by the identity figure 8 the suitability for the protection against electric arc, but under consideration to paragraph 2.12, appendix II of the PPE directive, signs or marks for statements relevant for security must be understandable and very uniform.
For PPE that fulfil the GS-ET-29 (2011-05)* requirements, in accordance with EN 61477, body protection and safety devices for the „live working”, shall be marked with the picture sign IEC 60417 – 5216 (symbol of the "double triangle" with addition „1000V). Eye – and face protectors against thermal effects by electric arc are body protection devices for “live working”, too. So, this marking for the description of the use shall be used.

(See also the use of the symbol for protective clothes against thermal effects of electric arc in accordance with IEC 61482-2 Ed.1:2009 Live working - Protective clothing against the thermal hazards of an electric arc - Part 2: Requirements)

* or a similar method (see RfU- 03 -024)

Sent for approval to : ☒ members of the VG ☐ other(s) VG ☒ HC (2) ☐ TC (3) ☒ SC (4) ☐ ISO TC94/SC6 (5)

(1) Essential safety requirement
(2) HC = horizontal committee
(3) N° of CEN/TC (Secretary & Chairman)
(4) EEC Standing Committee 89/392
(5) To be specified

	CO-ORDINATION OF NOTIFIED BODIES PPE-Directive 89/686/EEC + amendments RECOMMENDATION FOR USE	CNB/P/03.026 Revision 00 Language: E

Number of pages: 1	Date: 2015-12-05	Approval by: Approved on:
Origin: VG3 meeting 7/11/2013		☒ Vertical Group.....2015-06-25 ☒ Horizontal Committee .....2016-01-15 ☒ Standing Committee 2016-04-29

Question related to: Annex: Article:	EN/prEN: EN 166 : 2001 Clause: 7.1.2.2.2	Other:

Key words: Goggles, Face shields, Housings, Filtering action, Transmittance

Question:

EN 166:2001 clause 7.1.2.2.2 includes the following requirement:

"Goggles and face-shields which claim to provide protection against optical radiation shall provide at least the same level of protection against optical radiation as given by a filter of any scale number declared usable with the eye protector by the manufacturer or supplier."

How should this requirement be interpreted?

Solution:

The transmittance of the housing should be assessed against the transmittance requirements for the relevant scale numbers of the intended filters, with the following considerations:

The luminous transmittance of the housing shall match or be lower than the maximum luminous transmittance for the scale number of the most filtering ocular intended for use in the housing (e.g. for a scale number 2-2 filter, the housing luminous transmittance should not exceed 43,2%).

For requirements that are dependent upon the luminous transmittance, the value of luminous transmittance used as the reference value should be that equal to the maximum permitted for the scale number of the most filtering ocular intended for use in the housing (e.g. EN 170 : 2002 clause 5.2 c, for a scale number 2-2 filter, the housing spectral transmittance from 365nm to 405nm should not exceed 43,2%).

In the case of housings intended for use with welding filters, the requirement of EN 169 : 2002 5.2 d) is not applicable.

Requirements for enhanced colour recognition do not apply to the housing.

Requirements for enhanced reflectance in the infra red do not apply to the housing.

Rationale:

The requirements of the transmittance standards (e.g. EN 169) appear to have been written for the filters. It does not appear that consideration was given to the applicability of such detailed requirements to housing filtering performance.

Within a scale number there is a range of transmittance performance for those requirements that are based upon the luminous transmittance. It should be noted that the solution above could result in the housing have lower performance than the filter fitted, despite complying with the protective requirements for the stated scale number of the filtering ocular.

Sent for approval to : ☒ members of the VG ☐ other(s) VG ☒ HC (2) ☐ TC (3) ☒ SC (4) ☐ ISO TC94/SC6 (5)

(1) Essential safety requirement
(2) HC = horizontal committee
(3) N° of CEN/TC (Secretary & Chairman)
(4) EEC Standing Committee 89/392
(5) To be specified

	CO-ORDINATION OF NOTIFIED BODIES PPE-Directive 89/686/EEC + amendments RECOMMENDATION FOR USE	CNB/P/03.027 Revision 00 Language: E

Number of pages: 1	Date: 2015-12-05	Approval by: Approved on:
Origin: VG3 meeting 7/11/2013		☒ Vertical Group.....2015-06-25 ☒ Horizontal Committee .....2016-01-15 ☒ Standing Committee 2016-04-29

Question related to: Annex: Article:	EN/prEN: EN 166 : 2001 Clause:	Other:

Key words: Goggle

Question:

How should it be determined whether a product is a goggle or not?

Solution:

If a manufacturer states that a product is a goggle and the product comply with the definition (goggle) of EN ISO 4007, the laboratory should treat it as such.

However, the laboratory should not apply special provisions when testing such products. The products should satisfy the requirements when the tests are performed as for a 'conventional' goggle.

Rationale:

Increasingly, products exist that cross over the traditional design boundaries between spectacles and goggles. If the product satisfies the claimed performance when tested, the actual description of the product should not be important.

Sent for approval to : ☒ members of the VG ☐ other(s) VG ☒ HC (2) ☐ TC (3) ☒ SC (4) ☐ ISO TC94/SC6 (5)

(1) Essential safety requirement
(2) HC = horizontal committee
(3) N° of CEN/TC (Secretary & Chairman)
(4) EEC Standing Committee 89/392
(5) To be specified

	CO-ORDINATION OF NOTIFIED BODIES PPE-Directive 89/686/EEC + amendments RECOMMENDATION FOR USE	CNB/P/03.028 Revision 00 Language: E

Number of pages: 1	Date: 2015-12-05	Approval by: Approved on:
Origin: VG3 meeting 7/11/2013		☒ Vertical Group.....2015-06-25 ☒ Horizontal Committee .....2016-01-15 ☒ Standing Committee 2016-04-29

Question related to: Annex: Article:	EN/prEN: EN 166 : 2001 Clause: 7.1.2.2.2	Other:

Key words: Housing transmittance

Question:

Which areas of goggles or face shields should be assessed for transmittance?

Solution:

For goggles, any part of the frame falling within the protected range defined by EN 207:2009 clause 3.9, should be tested.

For face shields, any part of the frame/housing falling within the area of coverage defined by EN168:2001 clause 10.2, but bounded by the edge of the product, should be assessed.

In the case of holes or gaps in the product, whether an intentional design feature or not, if there is line of sight to the areas defined above, when viewed at any angle within the extreme range defined, then this should be recorded as a failure and measurement of transmittance is not required. Holes, gaps, or different frame materials, outside of these areas should be ignored.

Rationale:

Goggles typically provide eye protection, whereas face shields generally provide face protection as well as eye protection.

There are no minimum coverage requirements for goggles, or face shields in relation to radiation protection.

Practically, there should be a limit to the areas assessed.

Sent for approval to : ☒ members of the VG ☐ other(s) VG ☒ HC (2) ☐ TC (3) ☒ SC (4) ☐ ISO TC94/SC6 (5)

(1) Essential safety requirement
(2) HC = horizontal committee
(3) N° of CEN/TC (Secretary & Chairman)
(4) EEC Standing Committee 89/392
(5) To be specified

	CO-ORDINATION OF NOTIFIED BODIES PPE-Directive 89/686/EEC + amendments RECOMMENDATION FOR USE	CNB/P/03.029 Revision 00 Language: E

Number of pages: 1	Date: 2015-12-05	Approval by: Approved on:
Origin: VG3 meeting 7/11/2013		☒ Vertical Group.....2015-06-25 ☒ Horizontal Committee .....2016-01-15 ☒ Standing Committee 2016-04-29

Question related to: Annex: Article:	EN/prEN: EN 166 : 2001 Clause: 10 g)	Other:

Key words: Information, Spare parts, Accessories

Question:

What level of detail should be expected to comply with the requirement for the manufacturer to provide "details of suitable accessories and spare parts"?

Solution:

If spare parts or accessories are available for the product, the minimum information required could be simply an instruction that the user may contact the manufacturer for details.

It is acceptable for a manufacturer to infer the availability of generic parts, with the list covering a range of products (i.e. generic user instructions). This too should be considered acceptable. Details of specific part descriptions, part numbers or similar, should not be required.

In some cases, no spare parts or accessories are available. If the information indicates that the complete product is disposed of, then no reference to spare parts or accessories is required.

Sent for approval to : ☒ members of the VG ☐ other(s) VG ☒ HC (2) ☐ TC (3) ☒ SC (4) ☐ ISO TC94/SC6 (5)

(1) Essential safety requirement
(2) HC = horizontal committee
(3) N° of CEN/TC (Secretary & Chairman)
(4) EEC Standing Committee 89/392
(5) To be specified

	CO-ORDINATION OF NOTIFIED BODIES PPE-Directive 89/686/EEC + amendments RECOMMENDATION FOR USE	CNB/P/03.030 Revision 00 Language: E

Number of pages: 1	Date: 2015-12-05	Approval by: Approved on:
Origin: VG3 meeting 7/11/2013		☒ Vertical Group.....2015-06-25 ☒ Horizontal Committee .....2016-01-15 ☒ Standing Committee 2016-04-29

Question related to: Annex: Article:	EN/prEN: EN 207 : 2009 / AC : 2011 Clause: Scope	Other:

Key words: EC examination, lasers eyewear, filters

Question:

The question applies only to laser eyewear, filters, frames, face shields. Shall EC type examination certificates be issued for complete spectacles, goggles, face shields, etc or can EC type examination certificates be issued for single components separately, eg. for filters and frames on separate documents?

Solution:

Concerning laser eyewear, either EC type examination certificates shall be issued for complete spectacles, goggles, face shields, etc or EC type examination certificates shall be issued for single components separately, eg. for filters and frames on separate documents.

Sent for approval to : ☒ members of the VG ☐ other(s) VG ☒ HC (2) ☐ TC (3) ☒ SC (4) ☐ ISO TC94/SC6 (5)

(1) Essential safety requirement
(2) HC = horizontal committee
(3) N° of CEN/TC (Secretary & Chairman)
(4) EEC Standing Committee 89/392
(5) To be specified

Vertical Recommendation for Use sheets (RfUs)
of Vertical Group 4 "Hearing Protection"
of the European Coordination of Notified Bodies in the field of PPE

Number of RfU	Version	Reference	Keywords	Approved by Vertical Group 4	Approved by Horizontal Committee	Approved by PPE Expert Group
04.001	03	EN 352-1:2002 clause 4.3.8, EN 13819-1:2002 clause 4.4	Ear-muffs with different wearing modes, headband force	14/09/1993		15/12/2005
04.003	03	EN 352-4:2001, EN 352-1/2/3/5/6/7:2002 clause 6	Wearer information	14/09/1993		15/12/2005
04.004	03		Product modification	06/09/1994		15/12/2005
04.005	03		Testing of HPD without harmonised standards	06/09/1994		15/12/2005
04.006	03	EN 352, EN 13819-2:2002 clause 4.2, ISO 4869-1	HPD of particular size, sound attenuation measurement	06/09/1994		15/12/2005
04.007	03	EN 13819-1:2002 clauses 4.6, 4.7	Ear-muffs, drop test	06/09/1994		15/12/2005
04.008	03	EN 13819-2:2002 clause 4.2, ISO 4869-1	Sound attenuation, ear plugs in different colours	28/11/1995		15/12/2005
04.009	03	EN 13819-2:2002 clause 4.2, ISO 4869-1	Sound attenuation, custom-moulded ear-plugs	28/11/1995		15/12/2005
04.010	07	EN 352-2: 2002, 89/686/EEC, Annex II, Art.:1.2.1	Corded custom moulded ear-plugs, corded ear-plugs, ear plugs	06/01/2006	24/10/2011	15/05/2012
04.011	03	EN 352-2:2002 clause 4.2.2.4	Re-usable ear-plugs, storage-packaging	28/11/1995		15/12/2005
04.012	03	EN 352-3:2002 clause 4.3.4	Helmet mounted ear-muffs	28/11/1995		15/12/2005
04.014	04	EN 352-4:2001 clause 4.3.2, ISO 4869-4	Level-dependent ear-muffs, criterion levels	25/10/1999		15/12/2005
04.015	05	EN 352-4:2001 clause 4.3.3, EN 13819-2:2002, ISO 4869-4	Level-dependent ear-muffs, MIRE, measurement noise, volume control	19/10/2001		15/12/2005
04.016	05	EN 352-4:2001 clause 4.3, EN 458	Impulse noise, level-dependent ear-muffs with sound restoration system	19/10/2001		15/12/2005
04.017	04	EN 352-2:2002	Custom-moulded ear plugs	25/10/1999		15/12/2005
04.019	04	EN 352-4:2001, EN 352-8:2002	Level-dependent earmuffs with integrated broadcast-receiver	25/10/1999		15/12/2005
04.020	07	EN 352-6:2002	Communication ear-muffs with an audio input (by wire)	19/10/2001		15/12/2005
04.021	04	EN 352-8:2002	Ear-muffs with broadcast-receivers	25/10/1999		15/12/2005
04.022	04	EN 352-6/8/11:2002	Hearing protection device with audio communication	25/10/1999		15/12/2005
04.023	06	EN 352-5:2002 clause 4.3.2, 6 and Annex B	Testing of active noise reduction ear- muffs	19/10/2001		15/12/2005
04.027	04	EN 352-8:2002	Wireless complete hearing protection systems with reproduced sound for entertainment	26/10/1999		15/12/2005

Vertical Recommendation for Use sheets (RfUs)
of Vertical Group 4 "Hearing Protection"
of the European Coordination of Notified Bodies in the field of PPE

Number of RfU	Version	Reference	Keywords	Approved by Vertical Group 4	Approved by Horizontal Committee	Approved by PPE Expert Group
04.029	04	EN 352-3:2002 clause 4.1, EN 13819-1:2002 clause 4.2.3.2	Adjustability and size-ranges for ear-muffs attached to an industrial safety helmet	25/10/1999		15/12/2005
04.031	04	EN 352-11:2002	Communication ear-muffs receiving and transmitting wireless	11/09/2000		15/12/2005
04.032	05	EN 352-7:2002	Ear-plugs with audio communication	19/10/2001		15/12/2005
04.034	03	EN 352-4:2001 clause B.3 (Annex B)	MIRE-technique, interpolation, extrapolation, criterion level, level-dependent ear-muffs	19/10/2001		15/12/2005
04.035	04	EN 13819-2:2002 clauses 4.2.2, 4.3.2, ISO 4869-1	Test site, reverberation time, level-dependent hearing protector, active noise reduction (ANR) hearing protector	19/10/2001		15/12/2005
04.036	03	EN 13819-2:2002 clause 4.1.4	Insertion loss, asymmetric design, electronic ear-muffs	26/06/2001		15/12/2005
04.037	04	EN 13819-1:2002 clause 5.2.3	Nominal size designation, flanged ear-plugs	26/06/2001		15/12/2005
04.038	06	EN 352-4:2001, EN 352-7:2002, EN 352-1:2002, EN 352-2: 2002, EN 352-3:2002	Level dependent ear-muff/ -plugs, minimum criterion levels	14/10/2013	03/11/2014	19/09/2015
04.039	05		Ear plugs, special use, risk in water	17/09/2004	03/12/2005	15/07/2008
04.040	02	EN 352-7:2002, Clause 4.1.4	Ear plugs, non-passive ear-plugs, special use, impulse noise	06/01/2006	24/10/2011	15/05/2012
04.041	01	EN 352-6: 2002, Clause: Annex B, 89/686/EEC, Annex II, Article: 3.5	Calculation of mean electrical input level, ear muffs with electrical audio input	06/01/2006	24/10/2011	15/05/2012
04.042	02	EN 352-2: 2002, 89/686/ECC, Annex II, Article: 1.3.1	Banded ear plugs worn under the chin, test dimension for sizing	06/01/2006	24/10/2011	15/05/2012
04.043	01	EN 352-2: 2002, 89/686/ECC, Annex II, Article: 2.9	Banded ear plugs, exchange of plugs of banded ear-plugs	06/01/2006	24/10/2011	15/05/2012
04.044	01	EN 352-6: 2002,Clause: 4.2 89/686/ECC, Annex II, Article: 1.2	Ear muffs with electrical audio input, electrical safety	06/01/2006	24/10/2011	15/05/2012
04.045	01	EN 352-2: 2002, 89/686/ECC, Annex II, Article 3.5	Additional check of protective function, custom moulded ear plugs, leakage	19/03/2007	24/10/2011	15/05/2012
04.049	03	EN 352-6:2002	Ear muffs with communication facilities	17/01/2014	03/11/2014	19/09/2015

Vertical Recommendation for Use sheets (RfUs)
of Vertical Group 4 "Hearing Protection"
of the European Coordination of Notified Bodies in the field of PPE

Number of RfU	Version	Reference	Keywords	Approved by Vertical Group 4	Approved by Horizontal Committee	Approved by PPE Expert Group
04.050	02	EN 352-5:2002 + A1:2005	Hearing protectors with	14/10/2013	03/11/2014	19/09/2015
04.051	01	EN 13819-2:2002	Drop test for ear plugs	17/01/2014	03/11/2014	19/09/2015
04.052	01	EN 352-6:2002	Hearing protectors for safety-related communication, user information	17/01/2014	03/11/2014	19/09/2015

Note: Recommendation for Use sheets which deal with withdrawn and / or superseded standards and which no longer apply to new certifications are published as reference for previous files.

	CO-ORDINATION OF NOTIFIED BODIES **PPE-Directive 89/686/EEC + amendments** **RECOMMENDATION FOR USE**	CNB/P/04.001 Revision 03 Language : E

Number of pages : 1	Date : 21/04/2006	Approval by :	Approved on :
Origin : VG 4		☑ Vertical Group	13./14.09.1993
		☐ Horizontal Committee	.....
		☑ Standing Committee	15.12.2005

Question related to : Annex : Article :	EN/prEN : 352-1:2002/ 13819-1:2002 Clause : 4.3.8 of EN 352-1, 4.4 of EN 13819-1	Other :

Key words : Ear-muffs with different wearing modes, headband force

Question :

The test procedure (measurement of headband force) for ear-muffs in different wearing modes has not been specified in sufficient details in EN 352-1 and EN 13819-1. How shall the testing of 'headband force' and 'change of headband force' be performed for ear muffs with different wearing modes?

Solution :

1. When the change in headband force is checked during mechanical tests, the tests shall be performed only with one headband mode.
2. When measurements of the headband force have to be repeated the ear-muff shall be allowed to recover for at least 4 hour.

Sent for information to : ☐ members of the VG ☐ other(s) VG ☐ HC (2) ☐ TC (3) ☐ SC (4) ☐ other (5)

(1) Essential safety requirement
(2) HC = horizontal committee
(3) N° of CEN/TC (Secretary & Chairman)
(4) EEC Standing Committee 89/392
(5) To be specified

	CO-ORDINATION OF NOTIFIED BODIES **PPE-Directive 89/686/EEC + amendments** **RECOMMENDATION FOR USE**	CNB/P/04.003 Revision 03 Language : E

Number of pages : 1	Date : 21/04/2006	Approval by :	Approved on :
Origin : VG4 Hearing Protection		☑ Vertical Group	13./14.09.1993
		☐ Horizontal Committee	
		☑ Standing Committee	15.12.2005

Question related to : Directive 89/686/EEC Annex : II, 1.4 Article :	EN/prEN : 352-1/2/3/4/5/6/7 Clause : 6 (of EN 352-1/2/3/5/6/7:2002, of EN 352-4:2001)	Other :

Key words : Wearer information

Question :

In which language shall the draft of the wearer information be submitted?

Solution :

It was agreed that

1. the manufacturer's draft wearer information shall be made in a language acceptable to the test laboratory. The laboratory may assist the manufacturer to write the final wearer information in the test laboratory's official language

and

2. that the manufacturer, by signing the application form, undertakes to provide an identical translation to the official language(s) of the country of destination in Europe.

Sent for information to : ☐ members of the VG ☐ other(s) VG ☐ HC (2) ☐ TC (3) ☐ SC (4) ☐ other (5)

(1) Essential safety requirement
(2) HC = horizontal committee
(3) N° of CEN/TC (Secretary & Chairman)
(4) EEC Standing Committee 89/392
(5) To be specified

	CO-ORDINATION OF NOTIFIED BODIES **PPE-Directive 89/686/EEC + amendments** **RECOMMENDATION FOR USE**	CNB/P/04.004 Revision 03 Language : E

Number of pages : 1	Date : 21/04/2006	Approval by :	Approved on :
Origin : VG4 Hearing Protection		☑ Vertical Group	5./6.09.1994
		☐ Horizontal Committee	.....
		☑ Standing Committee	15.12.2005

Question related to : Annex : Article :	EN/prEN : Clause :	Other :

Key words : Product modification

Question :

Which tests are necessary for the EC-type examination of a modified existing CE marked HPD?

Solution :

The VG 4 agrees that, for the EC-type test of a modified existing CE marked HPD, it is the responsibility of the notified body to decide on what, if any, further testing is necessary. In case of doubt the notified body may seek guidance through the VG. Such decisions should be recorded by the notified body and presented at the subsequent VG-meeting.

Sent for information to : ☐ members of the VG ☐ other(s) VG ☐ HC (2) ☐ TC (3) ☐ SC (4) ☐ other (5)

(1) Essential safety requirement
(2) HC = horizontal committee
(3) N° of CEN/TC (Secretary & Chairman)
(4) EEC Standing Committee 89/392
(5) To be specified

	CO-ORDINATION OF NOTIFIED BODIES **PPE-Directive 89/686/EEC + amendments** **RECOMMENDATION FOR USE**	CNB/P/04.005 Revision 03 Language : E

Number of pages : 1	Date : 21/04/2006	Approval by :	Approved on :
Origin : VG4 Hearing Protection		☑ Vertical Group	05./06.09.1994
		☐ Horizontal Committee	.....
		☑ Standing Committee	15.12.2005

Question related to : Directive 89/686/EEC	EN/prEN :	Other :
Annex : Article :	Clause :	

Key words : Testing of HPD without harmonised standards

Question :

How to test HPDs for which no harmonised standard exists?

Solution :

VG 4 agrees that, for the EC-type test of an HPD for which no harmonised standard exists:-

a) Use the most recent prEN, or, if not available,

b) use the most recent committee working document, or, if not available,

c) approach VG 4 and request suggestions/solutions from other members.

Sent for information to : ☐ members of the VG ☐ other(s) VG ☐ HC (2) ☐ TC (3) ☐ SC (4) ☐ other (5)

(1) Essential safety requirement
(2) HC = horizontal committee
(3) N° of CEN/TC (Secretary & Chairman)
(4) EEC Standing Committee 89/392
(5) To be specified

	CO-ORDINATION OF NOTIFIED BODIES **PPE-Directive 89/686/EEC + amendments** **RECOMMENDATION FOR USE**	CNB/P/04.006 Revision 03 Language : E

Number of pages : 1	Date : 21/04/2006	Approval by :	Approved on :
Origin : VG4 Hearing Protection		☑ Vertical Group	05./06.09.1994
		☐ Horizontal Committee	.....
		☑ Standing Committee	15.12.2005

Question related to : Annex : Article :	EN/prEN : 352 (all parts), 13819-2 Clause : 4.2 (of 13819-2:2002)	Other : ISO 4869-1

Key words : HPD of particular size, sound attenuation measurement

Question :

How to test hearing protectors of particular size in accordance with EN 13819-2:2002, clause 4.2.

Solution :

VG 4 agrees that, when HPDs of a particular size (e.g. large, small) under EN 352 (all parts), the following protocol should be used:-

„In the case of an HPD which does not fit all size ranges given in the standard, each test subject shall be asked if the specimen fits. If it does, the test shall be performed. If it does not, the subject shall be rejected from the panel and replacement provided.

Sent for information to : ☐ members of the VG ☐ other(s) VG ☐ HC (2) ☐ TC (3) ☐ SC (4) ☐ other (5)

(1) Essential safety requirement
(2) HC = horizontal committee
(3) N° of CEN/TC (Secretary & Chairman)
(4) EEC Standing Committee 89/392
(5) To be specified

	CO-ORDINATION OF NOTIFIED BODIES **PPE-Directive 89/686/EEC + amendments** **RECOMMENDATION FOR USE**	CNB/P/04.007 Revision 03 Language : E

Number of pages : 1	Date : 21/04/2006	Approval by :	Approved on :
Origin : VG4 Hearing Protection		☑ Vertical Group	05./06.09.1994
		☐ Horizontal Committee	.....
		☑ Standing Committee	15.12.2005

Question related to : Annex : Article :	EN/prEN : 13819-1:2002 Clause : 4.6 and 4.7	Other :

Key words : Ear-muffs, drop test

Question :

How shall ear-muffs be examined for damage after drop test?

Solution:

When examining an HPD for damage after drop test, if necessary, the cushions and/or liners should be removed before examination and then replaced.

Sent for information to : ☐ members of the VG ☐ other(s) VG ☐ HC (2) ☐ TC (3) ☐ SC (4) ☐ other (5)

(1) Essential safety requirement
(2) HC = horizontal committee
(3) N° of CEN/TC (Secretary & Chairman)
(4) EEC Standing Committee 89/392
(5) To be specified

	CO-ORDINATION OF NOTIFIED BODIES **PPE-Directive 89/686/EEC + amendments** **RECOMMENDATION FOR USE**	CNB/P/04.008 Revision 03 Language : E

Number of pages : 1	Date : 21/04/2006	Approval by :	Approved on :
Origin : VG4 Hearing Protection		☑ Vertical Group	27./28.11.1995
		☐ Horizontal Committee	.....
		☑ Standing Committee	15.12.2005

Question related to : Annex : Article :	EN/prEN : 13819-2:2002 Clause : 4.2	Other : ISO 4869-1

Key words : Sound attenuation, ear plugs in different colours

Question :

Shall sound attenuation measurements be repeated in case a plug is supplied in different colours?

Solution :

If possible, one measurement should be performed and the samples used for that measurement should include all of the colours.

Sent for information to : ☐ members of the VG ☐ other(s) VG ☐ HC (2) ☐ TC (3) ☐ SC (4) ☐ other (5)

(1) Essential safety requirement
(2) HC = horizontal committee
(3) N° of CEN/TC (Secretary & Chairman)
(4) EEC Standing Committee 89/392
(5) To be specified

	CO-ORDINATION OF NOTIFIED BODIES **PPE-Directive 89/686/EEC + amendments** **RECOMMENDATION FOR USE**	CNB/P/04.009 Revision 03 Language : E

Number of pages : 1	Date : 21/04/2006	Approval by :	Approved on :
Origin : VG4 Hearing Protection		☑ Vertical Group.....	27./28.11.1995
		☐ Horizontal Committee	.....
		☑ Standing Committee	15.12.2005

Question related to : Annex : Article :	EN/prEN : 13819-2:2002 Clause : 4.2	Other : ISO 4869-1

Key words : Sound attenuation, custom moulded ear-plugs

Question :

Some types of custom moulded ear-plugs are offered with a special cream intended to ease the insertion of the plug into the ear-canal.

Shall sound attenuation measurements be performed using such cream?

Solution :

The sound attenuation measurements shall be performed without the use of such cream.

Sent for information to : ☐ members of the VG ☐ other(s) VG ☐ HC (2) ☐ TC (3) ☐ SC (4) ☐ other (5)

(1) Essential safety requirement
(2) HC = horizontal committee
(3) N° of CEN/TC (Secretary & Chairman)
(4) EEC Standing Committee 89/392
(5) To be specified

	CO-ORDINATION OF NOTIFIED BODIES **PPE-Directive 89/686/EEC + amendments** **RECOMMENDATION FOR USE**	CNB/P/04.010 Revision 07 Language : E

Number of pages : 1	Date : 14/11/2005	Approval by :	Approved on :
Origin : VG4 Hearing Protection (submitted by BGIA)		☑ Vertical Group..... ☑ Horizontal Committee ..... ☑ Standing Committee	06/01/2006 24/10/2011 15/05/2012

Question related to : Directive 89/686/EEC Annex : Annex II Article : 1.2.1	EN/prEN : EN 352-2:2002 Clause :	Other :

Key words : Corded custom moulded ear-plugs, corded ear-plugs, ear plugs

Question :

By sudden and fast removal of ear plugs ear drum ruptures occurred, especially when the cord of corded ear plugs was used to remove the plugs out of the ear canal. What should notified bodies require from the manufacturer to avoid this?

Solution :

The manufacturer should add a warning to the user information: “Warning: Sudden or fast removal of the ear plugs out of the ear canal may damage the ear drum.”

Sent for information to : ☑ members of the VG ☐ other(s) VG ☑ HC (2) ☑ TC 159 ☑ SC (4) ☐ other (5)

(1) Essential safety requirement
(2) HC = horizontal committee
(3) N° of CEN/TC (Secretary & Chairman)
(4) EEC Standing Committee 89/392
(5) To be specified

	CO-ORDINATION OF NOTIFIED BODIES **PPE-Directive 89/686/EEC + amendments** **RECOMMENDATION FOR USE**	CNB/P/04.011 Revision 03 Language : E

Number of pages : 1	Date : 21/04/2006	Approval by :	Approved on :
Origin : VG4 Hearing Protection		☑ Vertical Group.....	27./28.11.1995
		☐ Horizontal Committee	.....
		☑ Standing Committee	15.12.2005

Question related to : Annex : Article :	EN/prEN : EN 352-2:2002 Clause : 4.2.2.4	Other :

Key words : Re-usable ear-plugs, storage-packaging

Question :

How should a storage-packaging for re-usable ear-plugs be designed?

Solution :

No recommendation can be given. This must be decided by each notified body from case to case.

Sent for information to : ☐ members of the VG ☐ other(s) VG ☐ HC (2) ☐ TC (3) ☐ SC (4) ☐ other (5)

(1) Essential safety requirement
(2) HC = horizontal committee
(3) N° of CEN/TC (Secretary & Chairman)
(4) EEC Standing Committee 89/392
(5) To be specified

	CO-ORDINATION OF NOTIFIED BODIES **PPE-Directive 89/686/EEC + amendments** **RECOMMENDATION FOR USE**	CNB/P/04.012 Revision 03 Language : E

Number of pages : 1	Date : 21/04/2006	Approval by :	Approved on :
Origin : VG4 Hearing Protection		☑ Vertical Group.....	27./28.11.1995
		☐ Horizontal Committee	.....
		☑ Standing Committee	15.12.2005

Question related to : Annex : Article :	EN/prEN : EN 352-3:2002 Clause : 4.3.4	Other :

Key words : Helmet-mounted ear-muffs

Question :

A helmet-muff combination fulfilling the reqirements "Adjustablity" for M- and L-size has a headband force <14N for the M-size, but >14N for the L-size. Can this combination be tested and sold as a M-size combination only?

Solution :

It was agreed that such a combination can be tested and sold as an M-size combination only.

Sent for information to : ☐ members of the VG ☐ other(s) VG ☐ HC (2) ☐ TC (3) ☐ SC (4) ☐ other (5)

(1) Essential safety requirement
(2) HC = horizontal committee
(3) N° of CEN/TC (Secretary & Chairman)
(4) EEC Standing Committee 89/392
(5) To be specified

	CO-ORDINATION OF NOTIFIED BODIES **PPE-Directive 89/686/EEC + amendments** **RECOMMENDATION FOR USE**	CNB/P/04.014 Revision 04 Language : E

Number of pages : 1	Date : 21/04/2006	Approval by :	Approved on :
Origin : VG4 Hearing Protection		☑ Vertical Group	25/10/99
		☐ Horizontal Committee	.....
		☑ Standing Committee	15.12.2005

Question related to :	ENprEN : 352-4:2001	Other : ISO 4869-4
Annex : Article :	Clause : 4.3.2	

Key words :

Level-dependent ear-muffs, criterion levels

Question :

Should the criterion level (definded in prEN 352-4:1994) be the mean values minus one standard deviation?

Solution :

Yes. This is to get the same level of protection as established in EN 352-1, -2 and -3.

Sent for information to : ☐ members of the VG ☐ other(s) VG ☐ HC (2) ☐ TC 159 ☐ SC (4) ☐ other (5)

(1) Essential safety requirement
(2) HC = horizontal committee
(3) N° of CEN/TC (Secretary & Chairman)
(4) EEC Standing Committee 89/392
(5) To be specified

	CO-ORDINATION OF NOTIFIED BODIES **PPE-Directive 89/686/EEC + amendments** **RECOMMENDATION FOR USE**	CNB/P/04.015 Revision 05 Language : E

Number of pages : 1	Date : 21/04/2006	Approval by :	Approved on :
Origin : VG 4 Hearing protection		☑ Vertical Group	19.10.2001
		☐ Horizontal Committee	
		☑ Standing Committee	15.12.2005
			.....

Question related to :	EN/prEN : 352-4:2001/13819-2:2002	Other : ISO 4869-4
Annex : Article :	Clause : .../ 4.3.3	

Key words :

Level-dependent ear-muffs, MIRE, measurement noise, volume control

Question :

1. Which test method should be used for the testing? Should MIRE(microphone in real ear)- or HATS(head and torso simulator)- or ATF(acoustic test fixture)-technique be used?
2. Which tolerances shall be aimed at for the generation of the L-orientated, M- , and H-orientated noise described in EN 352-4?
3. Which adjustment of the volume control shall be used for the testing of the level-dependent function of the ear muff?

Recommended solution :

1. The MIRE-technique as described in Annex B of EN 352-4 (2001) should be used. In the area of the concha the microphone, including supporting elements and electrical leads, shall occupy an area not exceeding 25 mm² in the plane perpendicular towards the centre axis of the ear canal (this differs from ISO/DIS 11904-1). The microphone position shown in Figure 1 a) of ISO/DIS 11904-1:2000 shall be used. , i.e. open ear canal and the port of the microphone shows towards the ear drum and the position is in between the ear canal entrance and the ear drum, preferable near by the ear canal entrance in a distance of a few mm.
2. M-noise: L_C-L_A = + 2 ± 0,2 dB; H-orientated noise: L_C-L_A = $-1.2^{+0.1}_{-0.2}$ dB; L-orientated noise: L_C – L_A = $+6^{+0.4}_{-0.2}$ dB. Measure in one-third octave bands and calculate the L_C – L_A value.
3. Adjust to maximum volume.

Sent for information to : ☐ members of the VG ☐ other(s) VG ☐ HC (2) ☐ TC 159 ☐ SC (4) ☐ other (5)

(1) Essential safety requirement
(2) HC = horizontal committee
(3) N° of CEN/TC (Secretary & Chairman)
(4) EEC Standing Committee 89/392
(5) To be specified

	CO-ORDINATION OF NOTIFIED BODIES **PPE-Directive 89/686/EEC + amendments** **RECOMMENDATION FOR USE**	CNB/P/04.016 Revision 05 Language : E

Number of pages : 1	Date : 21/04/2006	Approval by :	Approved on :
Origin : VG 4 Hearing protection (submitted by BIA, Germany)		☑ Vertical Group.....	19.10.2001
		☐ Horizontal Committee	.....
		☑ Standing Committee	15.12.2005

Question related to : Annex : Article :	EN/prEN : 352-4:2001 Clause : 4.3	Other : 458

Key words :

Impulse noise, level dependent ear-muffs with sound restoration system

Question :

In which way shall the peak attenuation of level-dependent ear-muffs with sound restoration system be tested?

Recommended solution :

Note that EN 352-4:2001 does not cover the assessment of protection of ear muffs against the risk of exposure to high peak levels, i.e. $L_{peak} \geq 140$ dB. Check first on the ATF (artificial test fixture, EN 24869-3:1993) that the ear-muff works properly. Check with steady noise that the ear-muff is properly fitted onto the subjects head (with electronic switched off). Then measure - using an appropriate noise source i.e. a starting pistol with a peak level of 155-160 dB - the peak attenuation by MIRE-technique (see ISO 11904-1, 2002). If not applicable a suitable HATS (head and torso simulator) or ATF can be used but check the validity of the results.

Sent for information to : ☐ members of the VG ☐ other(s) VG ☐ HC (2) ☐ TC 159 ☐ SC (4) ☐ other (5)

(1) Essential safety requirement
(2) HC = horizontal committee
(3) N° of CEN/TC (Secretary & Chairman)
(4) EEC Standing Committee 89/392
(5) To be specified

	CO-ORDINATION OF NOTIFIED BODIES **PPE-Directive 89/686/EEC + amendments** **RECOMMENDATION FOR USE**	CNB/P/04.017 Revision 04 Language : E

Number of pages : 1	Date : 21/04/2006	Approval by :	Approved on :
Origin : VG 4 Hearing protection (submitted by BIA, Germany)		☑ Vertical Group.....	25.10.1999
		☐ Horizontal Committee	.....
		☑ Standing Committee	15.12.2005

Question related to :	EN/prEN : 352-2:2002	Other :
Annex : Article :	Clause :	

Key words :

Custom moulded ear-plugs

Question :

Which qualification is required for a person, who makes impressions of the concha and external ear-canal of the test subjects?

Recommended solution :

It should be carried out by a trained specialist for hearing aids or adequately trained personal.

Sent for information to : ☐ members of the VG ☐ other(s) VG ☐ HC (2) ☐ TC 159 ☐ SC (4) ☐ other (5)

(1) Essential safety requirement
(2) HC = horizontal committee
(3) N° of CEN/TC (Secretary & Chairman)
(4) EEC Standing Committee 89/392
(5) To be specified

	CO-ORDINATION OF NOTIFIED BODIES **PPE-Directive 89/686/EEC + amendments** **RECOMMENDATION FOR USE**	CNB/P/04.019 Revision 04 Language : E

Number of pages : 1	Date : 21/04/2006	Approval by :	Approved on :
Origin : VG 4 Hearing protection (submitted by BIA, Germany)		☑ Vertical Group	25.10.1999
		☐ Horizontal Committee	
		☑ Standing Committee	15.12.2005

Question related to : PPE-directive 89/686/EEC	EN/prEN : 352-4:2001, 352-8:2002	Other :
Annex : II Article : 1.2, 2.3	Clause :	

Key words :

Level-dependent ear-muffs with integrated broadcast-receiver

Question :

How should level-dependent ear-muffs with built-in broadcast-receivers be tested?

Recommended solution :

Level-dependent ear-muffs with built-in broadcast-receivers should be tested in the following way:

1. as a level-dependent ear-muff according to EN 352-4:2001 and
2. as a broadcast ear-muff using either signal generators or public broadcast stations applying the MIRE-technique according to prEN 352-8:2002.

Within a final test all functions of the ear-muff shall be set to maximum volume while the test subject is exposed to a diffuse sound field (according to EN 352-4:2001) at criterion level and simultanously a public broadcast station or a corresponding signal of a signal generator is received by the specimen under test. The maximum sound level achieved in this test situation has to be determined and assessed.

The manufacturer has to give a warning in the user information: "The audibility of warning signals at a specific workplace may be impaired.".

Sent for information to : ☐ members of the VG ☐ other(s) VG ☐ HC (2) ☐ TC 159 ☐ SC (4) ☐ other (5)

(1) Essential safety requirement
(2) HC = horizontal committee
(3) N° of CEN/TC (Secretary & Chairman)
(4) EEC Standing Committee 89/392
(5) To be specified

	CO-ORDINATION OF NOTIFIED BODIES **PPE-Directive 89/686/EEC + amendments** **RECOMMENDATION FOR USE**	CNB/P/04.020 Revision 07 Language : E

Number of pages : 1	Date : 21/04/2006	Approval by :	Approved on :
Origin : VG 4 Hearing protection (submitted by BIA)		☑ Vertical Group	19.10.2001
		☐ Horizontal Committee	
		☑ Standing Committee	15.12.2005

Question related to :	EN/prEN : 352-6:2002	Other :
Annex : Article :	Clause :	

Key words :

Communication ear-muffs with an audio input (by wire)

Question :

How should communication ear-muffs be tested? Which requirements shall be fulfilled by these HPDs?

Recommended solution :

One way system:

1. In addition to the requirements found in EN 352-6:2002, Annex B, clause B.3 input voltages shall be given in Vrms.
3. Assessment:
   - In case of a SPL-limitation test the limiter; the mean plus one standard deviation of the equivalent diffuse field SPL shall not exceed the level equal to 85 dB(A) minus 3dB(A).
   - In case of no SPL-limitation test the specification of the manufacturer delivered for the user (e.g. „criterion input voltage level“) in order not to exceed the daily exposure limit. Two warnings have to be given in the user information like „When exceeding the specified limits a risk of hearing impairment exists“ and „This hearing protector may not be used to restore entertainment.“.

Two way system:

Check the additional contribution to the SPL by the transmission via the microphone use an artificial mouth according ITU-T Recommendation P.50 (03/93) and P.51 (08/96) with speech simulating noise according to IEC 268-1 from 60 to 100 dB(A) in 5 dB-steps.

The manufacturer has to give a warning in the user information: "The audibility of warning signals at a specific workplace may be impaired.".

Sent for information to : ☐ members of the VG ☐ other(s) VG ☐ HC (2) ☐ TC 159 ☐ SC (4) ☐ other (5)

(1) Essential safety requirement
(2) HC = horizontal committee
(3) N° of CEN/TC (Secretary & Chairman)
(4) EEC Standing Committee 89/392
(5) To be specified

	CO-ORDINATION OF NOTIFIED BODIES **PPE-Directive 89/686/EEC + amendments** **RECOMMENDATION FOR USE**	CNB/P/04.021 Revision 04 Language : E

Number of pages : 1	Date : 21/04/2006	Approval by :	Approved on :
Origin : VG4 Hearing protection		☑ Vertical Group	25.10.1999
		☐ Horizontal Committee	
		☑ Standing Committee	15.12.2005

Question related to :	EN/prEN : 352-8:2002	Other :
Annex : Article :	Clause :	

Key words :

Ear-muffs with broadcast-receivers

Question :

Which test method should be applied for the broadcast receiving function of a protective ear-muff

i) using that public broadcast station which results in the highest sound pressure level or

ii) using a signal generator in the laboratory?

What is the allowable maximum sound pressure level for the broadcast restoration of an ear-muff with broadcast-receiver?

Recommended solution :

The decision referring to the selection of the signal source made should refer to the sound pressure level at the user's ear under typical or worst conditions. If the test laboratory provides typical or worst case conditions method i) should be preferred. Using method ii) the relationship between the sound pressure level produced by the signal generators and typical or worst case conditions must be determined.

The mean values plus one standard deviation - obtained out of 16 measured diffuse field related sound pressure levels (s. Annex B of prEn 352-8:2002) (at 16 ears) - shall be lower than 82 dB(A) for the broadcast restoration.

Sent for information to : ☐ members of the VG ☐ other(s) VG ☐ HC (2) ☐ TC 159 ☐ SC (4) ☐ other (5)

(1) Essential safety requirement
(2) HC = horizontal committee
(3) N° of CEN/TC (Secretary & Chairman)
(4) EEC Standing Committee 89/392
(5) To be specified

	CO-ORDINATION OF NOTIFIED BODIES **PPE-Directive 89/686/EEC + amendments** **RECOMMENDATION FOR USE**	CNB/P/04.022 Revision 04 Language : E

Number of pages : 1	Date : 21/04/2006	Approval by :	Approved on :
Origin : VG 4 Hearing protection		☑ Vertical Group 4	25.10.1999
		☐ Horizontal Committee	.....
		☑ Standing Committee	15.12.2005

Question related to : 89/686/EEC	EN/prEN : 352-6/-8/-11:2002,	Other :
Annex : II Article : 3.5	Clause :	

Key words :

Hearing protection device with audio communication

Question :

i) Is a hearing protection device (HPD) with audio communication a hearing protector within the meaning of directive 89/686/EEC?

ii) Is it possible to certify a communication hearing protector without sound pressure limiter limiting the total exposure of the user according to the requirement given in the PPE-Directive?

Recommended solution :

i) It is an HPD if the manufacturer declares it and it should meet the requirements of the directive.

ii) From the technical point of view it is possible to produce every communication hearing protector with a sound pressure level limiter. Therefore in general it should not be possible to certify communication hearing protectors without limiter. In case a specific need exists for no limitation or a limitation at higher values of L_{Aeq} (equivalent continous A-weighted sound pressure level) than those values of L_{Ard} (rating level) given by the

basic health and safety requirement „Protection against the harmful effects of noise“, clause 3.5 of Annex II of the Council Directive of 21 Decemner 1989 on the approximation of the laws of the Member States relating to personal protective equipment (89/686/EEC)

the use has to be restricted to specific applications. These applications have to be specified in the user information and on the packaging. In addition an appropriate warning and a description of the measures to be taken by the user is required in the user information in order not to exceed the daily limit value.

Sent for information to : ☐ members of the VG ☐ other(s) VG ☐ HC (2) ☐ TC 159 ☐ SC (4) ☐ other (5)

(1) Essential safety requirement
(2) HC = horizontal committee
(3) N° of CEN/TC (Secretary & Chairman)
(4) EEC Standing Committee 89/392
(5) To be specified

	CO-ORDINATION OF NOTIFIED BODIES **PPE-Directive 89/686/EEC + amendments** **RECOMMENDATION FOR USE**	CNB/P/04.023 Revision 06 Language : E

Number of pages : 1	Date : 21/04/2006	Approval by :	Approved on :
Origin : VG 4 Hearing protection (submitted by BIA)		☑ Vertical Group.....	19.10.2001
		☐ Horizontal Committee	.....
		☑ Standing Committee	15.12.2005

Question related to :	EN/prEN : EN 352-5:2002	Other :
Annex : Article :	Clause : 4.3.2, 6 and Annex B	

Key words :

Testing of active noise reduction ear-muffs

Question :

1. In which way APVs (assumed protection values, ISO 4869-2:1994) should be determined: Using

i) a combination of passive and active attenuation data or

ii) only active data resulting from MIRE(microphone in real ear)-measurements?

2. How to consider the spread of active attenuation (s. prEN 352-5, clause 4.3.3)?

3. Which noise shall be used for the testing and how to determine the relevant attenuation data?

Recommended solution :

1. A combination of passive and active attenuation data as specified in EN 352-5:2002. The combined mean and standard deviation shall be calculated as follows (this is not specified in EN 352-5:2002):

$$m_{combined,f} = m_{passive,f} + m_{MIRE,active-passive,f}$$ m: mean attenuation; f: midband frequency of the octave band

$$sd_{combined,f} = \sqrt{sd_{active,f}^{\ 2} + sd_{passive,f}^{\ 2}}$$ Sd: standard deviation.

2. The spread of active attenuation is not to be considered (the corresponding paragraph in the draft standard was cancelled by the CEN TC 159/WG 2 responsible).

3. Pink noise or similar noise as described in EN 352-5:2002, Annex B, clause B.2 shall be used. The relevant attenuation data (for H-,M-,L-value; H:high, M:medium and L:low frequency) shall be detemined by use of the octave band levels calculated from the one-third octave band levels measured with the test noise present and the hearing protector in i) active and ii) passive mode (active/passive mode: s. EN 352-5, clause 3).

$$APV_f = m_{passive,f} + m_{MIRE,active-passive,f} - \sqrt{\left(sd_{passive,f}\right)^2 + \left(sd_{MIRE,active-passive,f}\right)^2}$$

Sent for information to : ☐ members of the VG ☐ other(s) VG ☐ HC (2) ☐ TC 159 ☐ SC (4) ☐ other (5)

(1) Essential safety requirement
(2) HC = horizontal committee
(3) N° of CEN/TC (Secretary & Chairman)
(4) EEC Standing Committee 89/392
(5) To be specified

	CO-ORDINATION OF NOTIFIED BODIES **PPE-Directive 89/686/EEC + amendments** **RECOMMENDATION FOR USE**	CNB/P/04.027 Revision 04 Language : E

Number of pages : 1	Date : 21/04/2006	Approval by :	Approved on :
Origin : VG4 Hearing protection (submitted by BIA, Germany)		☑ Vertical Group 4	26.10.1999
		☐ Horizontal Committee	.....
		☑ Standing Committee	15.12.2005

Question related to :	EN/prEN : 352-8:2002	Other :
Annex : Article :	Clause :	

Key words :

Wireless complete hearing protection systems with reproduced sound for entertainment

Question :

These sytems transmit signals for example via local induction loaps. How should such products be tested?

Recommended solution :

They should be tested as ear-muffs with broadcast-receivers. (s. prEN 352-8:2002, Annex B, clause B.3)

Sent for information to : ☐ members of the VG ☐ other(s) VG ☐ HC (2) ☐ TC 159 ☐ SC (4) ☐ other (5)

(1) Essential safety requirement
(2) HC = horizontal committee
(3) N° of CEN/TC (Secretary & Chairman)
(4) EEC Standing Committee 89/392
(5) To be specified

	CO-ORDINATION OF NOTIFIED BODIES **PPE-Directive 89/686/EEC + amendments** **RECOMMENDATION FOR USE**	CNB/P/04.029 Revision 04 Language : E

Number of pages : 1	Date : 21/04/2006	Approval by :	Approved on :
Origin : VG4 Hearing protection (submitted by BIA, Germany)		☑ Vertical Group 4	25.10.1999
		☐ Horizontal Committee	.....
		☑ Standing Committee	15.12.2005

Question related to :		EN/prEN : 352-3:2002, 13819-1:2002	Other :
Annex :	Article :	Clause : 4.1 of 352-3 and 4.2.3.2 of 13819-1	

Key words :

Adjustability and size-ranges for ear-muffs attached to an industrial safety helmet

Question :

A helmet-muff-combination does not satisfy the requirements of EN 13819-1, clause 4.2.3.2, for any size-range. On the other hand it fits well for a panel of test subjects with different head sizes. How to handle this case?

Recommended solution :

The topic has to be discussed together with Vertical group 1. Contact the convenor.

Sent for information to : ☐ members of the VG ☐ other(s) VG ☐ HC (2) ☐ TC 159 ☐ SC (4) ☐ other (5)

(1) Essential safety requirement
(2) HC = horizontal committee
(3) N° of CEN/TC (Secretary & Chairman)
(4) EEC Standing Committee 89/392
(5) To be specified

	CO-ORDINATION OF NOTIFIED BODIES **PPE-Directive 89/686/EEC + amendments** **RECOMMENDATION FOR USE**	CNB/P/04.031 Revision 04 Language : E

Number of pages : 1	Date : 21/04/2006	Approval by :	Approved on :
Origin : VG4 Hearing protection (submitted by BIA, Germany)		☑ Vertical Group ..... ☐ Horizontal Committee ..... ☑ Standing Committee	11.09.2000 ..... 15.12.2005

Question related to : Directive 89/686/EEC		EN/prEN : 352-11:2002	Other :
Annex : Annex II	Article :	Clause :	

Key words :

Communication ear muffs receiving and transmitting wireless

Question :

How shall these HPD's be tested and assessed?

Recommended solution :

Test according to EN 352-11:2002. (Original RfU of CNB/P/4.031, Revision 02, was included in the draft standard prEN 352-11:2002.)

Sent for information to : ☐ members of the VG ☐ other(s) VG ☐ HC (2) ☐ TC 159 ☐ SC (4) ☐ other (5)

(1) Essential safety requirement
(2) HC = horizontal committee
(3) N° of CEN/TC (Secretary & Chairman)
(4) EEC Standing Committee 89/392
(5) To be specified

	CO-ORDINATION OF NOTIFIED BODIES **PPE-Directive 89/686/EEC + amendments** **RECOMMENDATION FOR USE**	CNB/P/04.032 Revision 05 Language : E

Number of pages : 1	Date : 21/04/2006	Approval by :	Approved on :
Origin : VG4 Hearing Protection (submitted by BIA)		☑ Vertical Group.....	19.10.2001
		☐ Horizontal Committee	.....
		☑ Standing Committee	15.12.2005

Question related to :		EN/prEN : 352-7:2002 (partly)	Other :
Annex :	Article :	Clause :	

Key words :

Ear-plugs with audio communication

Question : How shall ear plugs with audio communication be tested and assessed?

Recommended solution :

i) An IEC-711 coupler with an ear canal extension may be used following the procedures given for hearing aids in the relevant standards (Recent recommendation of the PTB-expert).

Sent for information to : ☐ members of the VG ☐ other(s) VG ☐ HC (2) ☐ TC 159 ☐ SC (4) ☐ other (5)

(1) Essential safety requirement
(2) HC = horizontal committee
(3) N° of CEN/TC (Secretary & Chairman)
(4) EEC Standing Committee 89/392
(5) To be specified

	CO-ORDINATION OF NOTIFIED BODIES **PPE-Directive 89/686/EEC + amendments** **RECOMMENDATION FOR USE**	CNB/P/04.034 Revision 03 Language : E

Number of pages : 1	Date : 21/04/2006	Approval by :	Approved on :
Origin : VG4 Hearing Protection (submitted by TNO)		☑ Vertical Group	19.10.2001
		☐ Horizontal Committee	.....
		☑ Standing Committee	15.12.2005

Question related to : Annex : Article :	EN/prEN : EN 352-4 (2001) Clause : B.3 (Annex B)	Other :

Key words : MIRE-technique, interpolation, extrapolation, criterion level, level-dependent ear muffs

Question :

For 3 types of external noises (high frequency orientated noise, medium frequency noise and low frequency orientated noise) at stepwise increased (external) levels the level under the level-dependent ear muff is obtained for 16 ears (8 test subjects) according to EN 352-4 using MIRE-technique (MIRE: Microphone in real ear, s. ISO DIS 11904-1:2000). The external level which corresponds to the level of 85 dB(A) under the hearing protector shall be determined. This external level (minus one standard deviation - as specified in RfU CNB/P/04.014) is called the criterion level.

1. Because of the level steps and individual characteristics of the test subjects a graphical interpolation is necessary to find this external level as recommended by EN 352-4. But this graphical interpolation is not specified in EN 352-4. What is meant by “graphical interpolation” in EN 352-4 to find the external A-weighted SPL?

2. Because the H-noise specified in ISO 4869-2 shows an L_C-L_A = -2 dB and the L-noise an L_C-L_A = 10 dB but the H orientated noise of EN 352-4 shows (because of technical reasons) an L_C-L_A=-1.2 dB and the L-noise an L_C-L_A = 6 dB an extrapolation is necessary. What procedure to follow in calculating criterion levels for H-value of –2 dB and L-value of 10 dB? The phrase “assuming a linear relationship” in EN 352-4 is very fuzzy. If the external SPLs for H-noise with L_C–L_A=–1,2 dB, M-noise with L_C–L_A=2 dB, and L-noise with L_C–L_A=–6 dB are not on a straight line (as will almost always be the case), extrapolation may lead to large errors (particularly for L-noise).

3. In finding the external A-weighted SPL (X) at which the mean A-weighted equivalent diffuse field SPL equals 85 dBA (Y), what procedure to follow?

i. Find X_i belonging to Y for each of 16 cups and calculate mean criterion level $(X_1+X_2+\ldots+X_{16})/16$. Note that X_i will nearly always be a calculated (interpolated) value, not measured directly.

ii. Calculate the mean Y-curve for all 16 cups. Given fixed measurement values for X (regular 5-dB intervals), the mean criterion level can be obtained by interpolation.

4. The MIRE-technique (MIRE: Microphone in real ear) proposed for use of testing level dependent ear-muffs by EN 352-4 is described in DIS 11904-1:2000. The sound level under hearing protector shall be measured when the test subject is exposed to an external sound field - according to EN 352-4. EN 352-4 reffers to ISO DIS 11904-1:2000.

Is it really necessary to have long measurement periods as described in ISO/CD 11904-1, clause 8.1? For a one-third-octave frequency band with midband frequency of 100 Hz, this results in a period of 50 s for each measurement.

Solution : 1. Use a point-to-point linear interpolation for each ear to get 16 individual criterion levels.

2. Report the criterion levels as determined by measurements for (L_C–L_A)-values of –1,2 dB for H and +6 dB for L, and determine by linear extrapolation the criterion level for –2 dB and +10 dB, respectively.

3. Take procedure i.

4. Use a measurement period of 20 s for a wideband sound (100 Hz – 10 kHz).

Sent for information to : ☐ members of the VG ☐ other(s) VG ☐ HC (2) ☐ TC 159 ☐ SC (4) ☐ other (5)

(1) Essential safety requirement
(2) HC = horizontal committee
(3) N° of CEN/TC (Secretary & Chairman)
(4) EEC Standing Committee 89/392
(5) To be specified

	CO-ORDINATION OF NOTIFIED BODIES **PPE-Directive 89/686/EEC + amendments** **RECOMMENDATION FOR USE**	CNB/P/04.035 Revision 04 Language : E

Number of pages : 1	Date : 21/04/2006	Approval by :	Approved on :
Origin : VG4 Hearing Protection (submitted by INRS, France)		☑ Vertical Group	19.10.2001
		☐ Horizontal Committee	.....
		☑ Standing Committee	15.12.2005

Question related to : Annex : Article :	EN/prEN : 13819-2:2002 Clause : 4.2.2 and 4.3.2	Other : ISO 4869-1

Key words : test site, reverberation time, level-dependent hearing protector, active noise reduction (ANR) hearing protector

Question : For testing level-dependent ear muffs according to EN 352-4:2001 or ANR-ear muffs according to EN 352-5:2002 MIRE-technique (MIRE: microphone in real ear) shall be used. When applying MIRE technique, is it necessary to limit the reverberation time of the test site under 1,6 s in each of the test bands used as required by 24869-1 ?

EN 13819-2 : 2001, requires :

1. in 4.2.2. the required apparatus, including test sites and sound field, is specified in EN 24869-1: 1992 which defines the reverberation time of the room.

Solution :

The compliance of reverberation time of the test site with the requirement of ISO 4869-1 and the necessity of the use of a reverberating room to obtain the high levels (particularly for the L noise) seems to be incompatible or at least needs special acoustical equipment.

Therefor the sound field used shall comply with the requirements of ISO 4869-1 except clause 3.11 reverberation time.

Sent for information to : ☐ members of the VG ☐ other(s) VG ☐ HC (2) ☐ TC 159 ☐ SC (4) ☐ other (5)

(1) Essential safety requirement
(2) HC = horizontal committee
(3) N° of CEN/TC (Secretary & Chairman)
(4) EEC Standing Committee 89/392
(5) To be specified

	CO-ORDINATION OF NOTIFIED BODIES **PPE-Directive 89/686/EEC + amendments** **RECOMMENDATION FOR USE**	CNB/P/04.036 Revision 03 Language : E

Number of pages : 1	Date : 21/04/2006	Approval by :	Approved on :
Origin : VG4 Hearing Protection (submitted by BIA, Germany)		☑ Vertical Group	26.06.2001
		☐ Horizontal Committee	
		☑ Standing Committee	15.12.2005
			.....

Question related to : Annex : Article :	EN/prEN : En 13819-2:2002 Clause : 4.1.4	Other :

Key words : insertion loss, asymmetric design, electronic ear muffs

Question :

The insertion loss is used to test variations of sound attenuation of the test specimen and to test the effect of conditioning (drop test, head band flexing, water immersion, ...) because conditioned and non-conditioned specimen are tested together. PrEN 13819-2 does not separate between left and right cups. For specific purposes manufacturers produce electronic ear muffs which show different sound attenuation what is intended by the manufacturer, e.g. left cup with lower sound attenuation and right cup with higher attenuation and restored communication signals. The mean is taken from all cups and the criterion is given in EN 352-1, -3 as follows: The standard deviation shall not be greater than 4,0 dB in four or more adjacent one.third octave bands, and not greater than 7,0 dB in any individual one-third octave band. This criterion may be not fulfilled by the mentioned special ear muff although the product shows a good design for a specific purpose.

Solution :

The criterion of EN 352-1,-3 to be used within the insertion loss may be applied separately to left and right cups in specific cases. In such a case the manufacturer has to include a statement (warning) in the user information specifying the special purpose of his product together with all the impacts on the users' safety resulting from the asymmetrical design of the hearing protector.

Sent for information to : ☐ members of the VG ☐ other(s) VG ☐ HC (2) ☐ TC 159 ☐ SC (4) ☐ other (5)

(1) Essential safety requirement
(2) HC = horizontal committee
(3) N° of CEN/TC (Secretary & Chairman)
(4) EEC Standing Committee 89/392
(5) To be specified

	CO-ORDINATION OF NOTIFIED BODIES **PPE-Directive 89/686/EEC + amendments** **RECOMMENDATION FOR USE**	CNB/P/04.037 Revision 04 Language : E

Number of pages : 1	Date : 21/04/2006	Approval by :	Approved on :
Origin : VG4 Hearing Protection		☑ Vertical Group	26.06.2001
		☐ Horizontal Committee	.....
		☑ Standing Committee	15.12.2005

Question related to : Annex : Article :	EN/prEN : 13819-1:2002 Clause : 5.2.3	Other :

Key words : nominal size designation, flanged ear-plugs

Question : "In order to assign a nominal size designation to each ear-plug, the dimensions of that part or those parts of the ear-plug that are intended to seal the ear canal are assessed using a gauge comprising a set of circular holes" (EN 13819-1:2002, clause 5.2).

Which flanges shall seal the circular hole?

Solution :

At least that flange showing the smallest and that one with the largest diameter shall seal one circular hole.

Sent for information to : ☐ members of the VG ☐ other(s) VG ☐ HC (2) ☐ TC 159 ☐ SC (4) ☐ other (5)

(1) Essential safety requirement
(2) HC = horizontal committee
(3) N° of CEN/TC (Secretary & Chairman)
(4) EEC Standing Committee 89/392
(5) To be specified

	CO-ORDINATION OF NOTIFIED BODIES **PPE-Directive 89/686/EEC + amendments** **RECOMMENDATION FOR USE**	CNB/P/04.038 Revision 06 Language : E

Number of pages : 1	Date : 14/10/04	Approval by :	Approved on :
Origin : VG 4 Hearing Protection (submitted by BIA, Germany)		☒ Vertical Group.....	2013/10/14
		☒ Horizontal Committee	2014/11/03
		☒ Standing Committee	2015/09/19

Question related to : Annex : Article :	EN/prEN : EN 352-4:2001 EN 352-7:2002 Clause : 4.3.2 (in both standards)	Other : EN 352-1:2002, EN 352-2:2002, EN 352-3:2002

Key words : level dependent ear-muff/-plugs, minimum criterion levels

Question :

Existing standards of EN 352 series do not specify any minimum protection requirement for level-dependent ear-muffs/-plugs when worn (as designed) with the level-dependent mode in operation. In case a level-dependent ear-muff/-plug provides sufficient attenuation in passive mode but exposes the user by an internal level of 86 dB(A) where the external level is 83 or 86 dB(A) when operated in level-dependent mode this hearing protector offers a lower level of protection in this mode.

How shall these products be dealt with?

Recommended solution :

All products shall at least have a criterion level (for all test noises H, M and L) of 85 dB(A). This eliminates extreme products that have a very high amplification and/or a very high standard deviation.

In addition to that requirement there are minimum criterion levels derived from the minimum attenuation values for passive HPDs from EN 352-1 to -3 (H = 12 dB, M = 11 dB, L = 9 dB):

Minimum criterion level H: 97 dB(A)

Minimum criterion level M: 96 dB(A)

Minimum criterion level L: 94 dB(A)

(The determination of criterion levels is specified in EN 352-4:2001+A1:2005.)

These requirements shall only be applied for products that are aimed at continuous noise situations. For products that are specifically defined for impulse noise (e.g. for hunters) it is not necessary to meet these criteria.

The criterion levels shall nevertheless be mentioned in the user information with a warning that the product is not suited for high continuous noise levels.

Sent for information to : ☒ members of the VG ☐ other(s) VG

☒ HC (2) ☒ TC 159 ☒ SC (4) ☐ other (5)

(1) Essential safety requirement
(2) HC = horizontal committee
(3) N° of CEN/TC (Secretary & Chairman)
(4) EEC Standing Committee 89/392
(5) To be specified

	CO-ORDINATION OF NOTIFIED BODIES **PPE-Directive 89/686/EEC + amendments** **RECOMMENDATION FOR USE**	CNB/P/04.039 Revision 05 Language: E

Number of pages: 1	Date: 15.08.2008	Approval by : Approved on :
Origin : Vertical Group 4 'Hearing Protection' (submitted by INRS, France)		☒ Vertical Group 17.09.2004 ☒ Horizontal Committee 03.12.2005 ☒ Standing Committee 15.07.2008

Question related to: Directive 89/686/EEC	EN/prEN:	Other:
Annex: Article:	Clause:	

Key words:

Ear plugs, special use, risk in water

Question:

Ear plugs are not only used to protect hearing against the harmful effects of noise.
Ear plugs are also used by swimmers (particularly in swimming pools) against the eventual harmful effects of water in this kind of place.

The question is:
Are ear plugs used in swimming pools kind of PPE?

Solution:

The "Guide for the categorisation of Personal Protective Equipment (PPE)" published on 30 November 1998 specified that "PPE for private use to protect against moisture, water" fall under category 0. A certification against Directive 89/686/EEC is therefore not possible.

But it might be possible to certify the product in question against the Council Directive 93/42/EEC of 14 June 1993 concerning medical devices because a protection of the middle ear against water while swimming in a pool is necessary e.g. for individuals with perforated ear drums.

Sent for information to: ☒ members of the VG ☐ other(s) VG ☒ HC (2) ☒ TC (3) ☒ SC (4) ☐ other (5)

(3): 159 (5):

(1) Essential safety requirement
(2) HC = horizontal committee
(3) N° of CEN/TC (Secretary & Chairman)
(4) EEC Standing Committee 89/392
(5) To be specified

	CO-ORDINATION OF NOTIFIED BODIES **PPE-Directive 89/686/EEC + amendments** **RECOMMENDATION FOR USE**	CNB/P/04.040 Revision 02 Language : E

Number of pages : 1	Date : 15/03/04	Approval by :	Approved on :
Origin : VG 4 Hearing Protection (submitted by INRS, France)		☑ Vertical Group ..... ☑ Horizontal Committee ..... ☑ Standing Committee	06/01/2006 24/10/2011 15/05/2012

Question related to : Directive 89/686/EEC Annex : Article :	EN/prEN : 352-7:2002 Clause : 4.1.4	Other :

Key words : ear plugs, non-passive ear-plugs, special use, impulse noise

Question :

In which way shall the peak attenuation against very high level peak noise of level-dependent ear-plugs without electronic sound restoration be tested?

Recommended solution :

Note that EN 352-7: 2003 does not cover the assessment of protection of ear plugs against the risk of exposure to high peak levels.

Measure the peak attenuation on a suitable ear simulator, using an appropriate noise source. The conversion of the measurement data into data characterising the equivalent external impulse sound field may be not straight forward. Only those converted data can be used to compare the exposure under an ear plug to peak limit values specified in the EU Directive 2003/10/EC.

Sent for information to : ☑ members of the VG ☐ other(s) VG ☑ HC (2) ☑ TC 159 ☑ SC (4) ☐ other (5)

(1) Essential safety requirement
(2) HC = horizontal committee
(3) N° of CEN/TC (Secretary & Chairman)
(4) EEC Standing Committee 89/392
(5) To be specified

	CO-ORDINATION OF NOTIFIED BODIES **PPE-Directive 89/686/EEC + amendments** **RECOMMENDATION FOR USE**	CNB/P/04.041 Revision 01 Language : E

Number of pages : 1	Date : 2004/09/16	Approval by :	Approved on :
Origin : VG 4 Hearing Protection (submitted by BGIA, Germany)		☑ Vertical Group ..... ☑ Horizontal Committee ..... ☑ Standing Committee	06/01/2006 24/10/2011 15/05/2012

Question related to : 89/686/EEC Annex : II Article : 3.5	EN/prEN : EN 352-6:2002 Clause : (Annex B)	Other :

Key words : Calculation of mean electrical input level, ear muffs with electrical audio input

Question :

Annex B of EN 352-6 asks for the calculation of the electrical input level for which the mean value plus one standard deviation of the A-weighted diffuse-field related sound pressure level of all sixteen ears is equal to 82 dB(A) .

The procedure to find the mean value is not specified. How should the mean electrical input level be determined?

Recommended solution :

Corresponding to the calculation of the criterion levels in EN 352-4 the following procedure should be applied:

Determine, by interpolation where necessary, the electrical input level (X_i) for which the A-weighted diffuse-field related sound pressure level under the ear-muff is equal to 82 dB for each of the 16 ears and then calculate the mean electric input level $(X_1+X_2+\ldots+X_{16})/16$ and the standard deviation.

Sent for information to : ☑ members of the VG ☐ other(s) VG ☑ HC (2) ☑ TC 159 ☑ SC (4) ☐ other (5)

(1) Essential safety requirement
(2) HC = horizontal committee
(3) N° of CEN/TC (Secretary & Chairman)
(4) EEC Standing Committee 89/392
(5) To be specified

	CO-ORDINATION OF NOTIFIED BODIES **PPE-Directive 89/686/EEC + amendments** **RECOMMENDATION FOR USE**	CNB/P/04.042 Revision 02 Language : E

Number of pages : 1	Date : 2005/09/09	Approval by :	Approved on :
Origin : VG4 Hearing Protection (submitted by BGIA, Germany)		☑ Vertical Group ..... ☑ Horizontal Committee ..... ☑ Standing Committee	06/01/2006 24/10/2011 15/05/2012

Question related to : 89/686/EEC Annex : II Article : 1.3.1	EN/prEN : EN 352-2 (2002) Clause :	Other :

Key words : Banded ear plugs worn under the chin, test dimension for sizing

Question :

EN 352-2 (2002) specifies only dimensions for “over the head and under the chin” and “behind the head”. How can banded ear plugs be tested in case they are especially designed for only “under the chin”? For “under the chin” smaller heights may be appropriate. Which heights shall be required as minimum?

Recommended solution:

An additional specification for “under the chin” banded ear plugs is needed.

Use the heads specified in EN 13819-1 picture 11 and add the following test dimensions for the test height (horizontal distance top to hole):

Head A (width 125 mm): 95 mm and 110 mm (chin)

Head B (width 145 mm): 90 mm, 105 and 115 mm (chin)

Head C (width 155 mm): 105 mm and 115 mm (chin)

Head A represents dimensions relevant for the test for 5 percentile of females and head C represents dimensions relevant for the test for the 95 percentile of males. Anthropometric data used were collected in 1989 (Handbuch der Ergonomie mit ergonomischen Konstruktionsrichtlinien, Band 3; Stand: 1989, Zweite, überarbeitete und erweiterte Auflage, herausgegeben von Bundesamt für Wehrtechnik und Beschaffung, Koblenz, Carl Hanser Verlag, München, Wien).

Sent for information to : ☑members of the VG ☐ other(s) VG ☑ HC (2) ☑ TC 159 ☑ SC (4) ☐ other (5)

(1) Essential safety requirement
(2) HC = horizontal committee
(3) N° of CEN/TC (Secretary & Chairman)
(4) EEC Standing Committee 89/392
(5) To be specified

	CO-ORDINATION OF NOTIFIED BODIES **PPE-Directive 89/686/EEC + amendments** **RECOMMENDATION FOR USE**	CNB/P/04.043 Revision 01 Language : E

Number of pages : 1	Date : 2005/11/11	Approval by :	Approved on :
Origin : VG4 Hearing Protection (submitted by BGIA, Germany)		☑ Vertical Group ..... ☑ Horizontal Committee ..... ☑ Standing Committee	06/01/2006 24/10/2011 15/05/2012

Question related to : 89/686/EEC Annex : II Article : 2.9	EN/prEN : EN 352-2 (2002) Clause : 6.2	Other :

Key words : Banded ear plugs, exchange of plugs of banded ear plugs

Question :

EN 352-2 does not require a description on exchange of plugs of banded ear plugs to be included within the user instruction as EN 352-1 does for exchange of cushions of ear muffs.

Recommended solution:

The manufacturer shall add a description on how to exchange plugs of banded ear plugs to the wearer information in case he provides exchange sets for that banded ear plugs.

Sent for information to : ☑members of the VG ☐ other(s) VG ☑ HC (2) ☑ TC 159 ☑ SC (4) ☐ other (5)

(1) Essential safety requirement
(2) HC = horizontal committee
(3) N° of CEN/TC (Secretary & Chairman)
(4) EEC Standing Committee 89/392
(5) To be specified

	CO-ORDINATION OF NOTIFIED BODIES **PPE-Directive 89/686/EEC + amendments** **RECOMMENDATION FOR USE**	CNB/P/04.044 Revision 01 Language : E

Number of pages : 1	Date : 2005/11/11	Approval by :	Approved on :
Origin : VG4 Hearing Protection (submitted by BGIA, Germany)		☑ Vertical Group ..... ☑ Horizontal Committee ..... ☑ Standing Committee	06/01/2006 24/10/2011 15/05/2012

Question related to : 89/686/EEC Annex : II Article : 1.2	EN/prEN : EN 352-6 (2002) Clause : 4.2	Other :

Key words : ear muffs with electrical audio input, electrical safety

Question :

For ear muffs with electrical audio input EN 352-6, clause 4.2 requires: “The electrical circuit of the ear muff shall meet the electrical safety and EMC requirements appropriate to this class of equipment.” Which documents are required and appropriate to check that the requirement given in EN 352-6, clause 4.2 is fulfilled?

Recommended solution:

The change on EN 352-6, clause 4.2 agreed on within the meeting of CEN TC 159 WG 2 on 2005-11-15 in London was: “The electrical circuit of the ear muff shall meet the appropriate electrical safety and EMC requirements.” A declaration written by the manufacturer may be appropriate (like that one for “suitable constituent materials”).

Sent for information to : ☑members of the VG ☐ other(s) VG ☑ HC (2) ☑ TC 159 ☑ SC (4) ☐ other (5)

(1) Essential safety requirement
(2) HC = horizontal committee
(3) N° of CEN/TC (Secretary & Chairman)
(4) EEC Standing Committee 89/392
(5) To be specified

	CO-ORDINATION OF NOTIFIED BODIES **PPE-Directive 89/686/EEC + amendments** **RECOMMENDATION FOR USE**	CNB/P/04.045 Revision 01 Language : E

Number of pages : 1	Date : 2007/02/01	Approval by :	Approved on :
Origin : VG4 Hearing Protection (submitted by BGIA)		☑ Vertical Group.....	19/03/2007
		☑ Horizontal Committee	24/10/2011
		☑ Standing Committee	15/05/2012

Question related to : 89/686/EEC Annex : II Article : 3.5	EN/prEN : EN 352-2 (2002) Clause :	Other :

Key words : Additional check of protective function, custom moulded ear plugs, leakage

Question :

For production of custom moulded ear plugs individual imprints of the user's ear canal and pinna are prepared by the manufacturer. Based on this imprint the final PPE is produced by the manufacturer in his premises. About 5 % of custom moulded ear plugs show a leakage which results in a significant underprotection as studies showed. How can the conformity with the relevant basic health and safety requirement of the 89/686/EEC directive be tested?

Recommended solution:

The number of cases, where leakage was found, can only by decreased but never will disappear. As a tension of a facial muscle during preparation of the imprint (duration is several minutes) can not completely be avoided and such a tension can change the shape of the ear canal - e.g. by decreasing of ear canal diameter – the imprint will become too small. The final product will show a leakage and in turn a significant and unknown reduction of the protective function. The user can not compensate the leakage by e.g. deeper insertion as he can do using foam plugs. To guarantee the protective function as specified the only solution is to perform a final check of the function at the user's ear canal by the manufacturer. There are techniques available using e.g. little overpressure or loudspeakers and a probe microphone. During EC-type examination such a test has to be applied by the manufacturer as well as the test equipment has to be described by the manufacturer. The conformity of the description has to be assessed by the notified body as specified in RfU CNB/P/00.034.

Sent for information to : ☑ members of the VG ☐ other(s) VG ☑ HC (2) ☑ TC 159 ☑ SC (4) ☐ other (5)

(1) Essential safety requirement
(2) HC = horizontal committee
(3) N° of CEN/TC (Secretary & Chairman)
(4) EEC Standing Committee 89/392
(5) To be specified

	CO-ORDINATION OF NOTIFIED BODIES **PPE-Directive 89/686/EEC + amendments** **PROPOSAL FOR ENQUIRY**	CNB/P/04.049 Revision 03 Language : E

Number of pages : 1	Date : 2013/03/04	Approval by :	Approved on :
Origin : VG4 Hearing Protection (submitted by IFA)		☒ Vertical Group	2014/01/17
		☒ Horizontal Committee	2014/11/03
		☒ Standing Committee	2015/09/19

Question related to : 89/686/EEC	EN/prEN : EN 352-6:2002	Other :
Annex : II Article : 3.5	Clause :	

Key words : Ear muffs with communication facilities

Question :

EN 352-6 uses MIRE technique to determine the dependence between the sound level at the ear of the user and the input voltage. Since test subjects are used the maximum level to be reached is 85 dB(A) (diffuse-field corrected). For safety-related communication higher levels may be necessary during work. In order to be able to assess the total sound exposure the user has to know if the product behaves linearily for higher input voltages and if it possible to extrapolate the MIRE data.

How can the necessary additional data be determined and communicated in the user information?

Recommended solution:

The product (all four samples – eight cups) shall be measured with signal input on an ATF (HATS with a coupler according to EN 60318-4:2010) starting with the voltage that resulted in a level of 70 dB(A) with the test subjects. The manufacturer is to be asked for the maximum allowed input voltage. The voltage shall be increased in 5 dB steps up to a diffuse-field corrected value at the ATF of 120 dB(A) or saturation of the signal (or up to the maximum input voltage).

Since the sound levels will typically not be identical to the MIRE results the curve has to be shifted to match the MIRE results for the range where both curves overlap using the following procedure:

- Use the calculation procedure for the criterion voltage (according to RfU 04.041 (latest published online version)) to determine from the MIRE data the input voltage that results in an SPL of 85 dB(A) (diffuse-field corrected).
- For that purpose interpolate for each of the 16 ears the voltage value that results in 85 dB(A). Mean minus standard deviation for the 16 values gives the required voltage, U_{85}.
- Measure all four samples (eight data sets) on the ATF and calculate the mean over the eight values for each input voltage.
- The mean of the values measured on the ATF will probably not contain a data point with the voltage value of U_{85}, therefore determine this point by interpolation.
- Determine the difference between MIRE and ATF values at U_{85}.
- Shift the whole ATF mean curve by this offset.

The combined data from MIRE and ATF shall be presented in the user information as a table (dB SPL vs. U in mV). If a graphical interpolation is wished for the data have to be plotted with a logarithmically spaced voltage axis. To display the whole range of input voltages apply RfU 04.041 (latest published online version) to the MIRE data to get the corresponding voltage values for 70, 75 and 80 dB(A). Moreover the maximum allowed input voltage is to be stated in the user information.

Sent for information to : ☒ members of the VG ☐ other(s) VG ☒ HC (2) ☒ TC 159 ☒ SC (4) ☐ other (5)

(1) Essential safety requirement
(2) HC = horizontal committee
(3) N° of CEN/TC (Secretary & Chairman)
(4) EEC Standing Committee 89/392
(5) To be specified

	CO-ORDINATION OF NOTIFIED BODIES **PPE-Directive 89/686/EEC + amendments** **RECOMMENDATION FOR USE**	CNB/P/04.050 Revision 02 Language : E

Number of pages : 1	Date : 2013/03/04	Approval by :	Approved on :
Origin : VG4 Hearing Protection		☒ Vertical Group	2013/10/14
		☒ Horizontal Committee	2014/11/03
		☒ Standing Committee	2015/09/19

Question related to : 89/686/EEC Annex : II Article : 3.5	EN/prEN : EN 352-5:2002 + A1:2005 Clause : 6.1 c) and Annex B	Other :

Key words : Hearing protectors with active noise control

Question :

EN 352-5 does not clearly specify the procedure to calculate the total sound attenuation in the active mode of the ANR HPD. Moreover the user information in not required to contain the total attenuation, only the active values.

How shall the total sound attenuation be calculated and what attenuation values shall be included in the user information?

Recommended solution:

Aim is the calculation of the assumed protection value (APV) of the total (active plus passive) attenuation. It shall be derived by the active attenuation measured according to EN 352-5, Annex B and the passive attenuation determined according to EN 24869-1:1992.

1. Calculate the mean and standard deviation of the active attenuation in one-third octave bands between 50 Hz and 10 kHz as measured according to chapter 5.2/annex B of EN 352-5.
2. Interpolate the subjective REAT data (from 16 test subjects according to EN 24869-1:1992) linearly in one-third octave bands between 63 Hz and 8 kHz for mean and SD. Extrapolate the subjective data to 50 Hz and 10 kHz.
3. Add the mean values of the two contributions (active and passive) to get the mean of the total attenuation for each one-third octave band.
4. Average the three one-third octave bands of total attenuation for one octave band (between 63 Hz and 8 kHz) energetically (using negative values, i.e. the residual level under the HPD). The lowest attenuation has the highest weight for the end result. This yields the mean of the total attenuation in octave bands.
5. Sum the standard deviation of passive and active attenuation quadratically for one-third octave bands between 50 Hz and 10 kHz.
6. Average the three standard deviation values for one octave band (between 63 Hz and 8 kHz) energetically using positive values, i.e. the highest value has the highest weight for the end result. This yields the standard deviation of the total attenuation in octave bands.
7. Calculate the APV for each octave band by subtracting the standard deviation from the mean of the total attenuation.

$$APV_{tot} = m_{tot} - s_{tot}$$

Content of the user information (6.1 c):

The user information shall contain the mean, standard deviation and APV between 63 Hz and 8 kHz for the total attenuation together with the derived HML and SNR values.

Sent for information to : ☒ members of the VG ☐ other(s) VG ☒ HC (2) ☒ TC 159 ☒ SC (4) ☐ other (5)

(1) Essential safety requirement
(2) HC = horizontal committee
(3) N° of CEN/TC (Secretary & Chairman)
(4) EEC Standing Committee 89/392
(5) To be specified

	CO-ORDINATION OF NOTIFIED BODIES **PPE-Directive 89/686/EEC + amendments** **RECOMMENDATION FOR USE**	CNB/P/04.051 Revision 01 Language : E

Number of pages : 1	Date : 2013/10/14	Approval by :	Approved on :
Origin : IFA		☒ Vertical Group	2014/01/17
		☒ Horizontal Committee	2014/11/03
		☒ Standing Committee	2015/09/19

Question related to : 89/686/EEC Annex : II Article : 3.5	EN/prEN : EN 13819-2:2002 Clause : 5.4	Other :

Key words : Drop test for ear plugs

Question :

How many samples should be used for the drop test of ear plugs according to EN 13819-2, clause 5.4?

Recommended solution:

All samples that are going to be used for the REAT testing with 16 test subjects should be used for the drop test.

Sent for information to : ☒members of the VG ☐ other(s) VG ☒ HC (2) ☒ TC 159 ☒ SC (4) ☐ other (5)

(1) Essential safety requirement
(2) HC = horizontal committee
(3) N° of CEN/TC (Secretary & Chairman)
(4) EEC Standing Committee 89/392
(5) To be specified

	CO-ORDINATION OF NOTIFIED BODIES **PPE-Directive 89/686/EEC + amendments** **RECOMMENDATION FOR USE**	CNB/P/04.052 Revision 01 Language : E

Number of pages : 1	Date : 2013/10/14	Approval by :	Approved on :
Origin : IFA		☒ Vertical Group	2014/01/17
		☒ Horizontal Committee	2014/11/03
		☒ Standing Committee	2015/09/19

Question related to : 89/686/EEC Annex : II Article : 3.5	EN/prEN : EN 352-6:2002 Clause : 6	Other :

Key words : Hearing protectors for safety-related communication, user information

Question :

How can it be ensured that hearing protectors for safety-related communication (that do not contain a limiter) are not used for entertainment purposes?

Recommended solution:

An additional warning in the user information should be included that reads:

“This product may not be used for entertainment since the output level is not limited to the necessary innocuous level.”

Sent for information to : ☒members of the VG ☐ other(s) VG ☒ HC (2) ☒ TC 159 ☒ SC (4) ☐ other (5)

(1) Essential safety requirement
(2) HC = horizontal committee
(3) N° of CEN/TC (Secretary & Chairman)
(4) EEC Standing Committee 89/392
(5) To be specified

Vertical Recommendation for Use sheets (RfUs)
of Vertical Group 5 "Protective Clothing, Hand and Arm Protection"
of the European Coordination of Notified Bodies in the field of PPE

Number of RfU	Revision	Reference - Keywords	Approved by Vertical Group 5	Approved by PPE Expert Group
Contamination EN 421		Protective gloves against ionizing radiation and radioactive - EN 421, clause 5.2: gloves; radioactive; requirements - EN 421, clause 6.3.4: water vapour permeability	07/02/07	30/04/09
EN 469		Requirements and test methods for protective clothing for fire fighting - Clause 1: certification, separate clothing items - Clause 4.6: closure systems - Clause 4.9: neck protection - Clause 5.2: pre-treatments -Clause 5.3 and 6.1: flame spread of materials - Clause 5.4: flammability, number of washing cycles, durability - Clause 6.1: accessories (threads, embroideries, seams) – Clause 6.1.6: hardware - Clause 6.4 and 7.5: radiant heat, residual strength – Clause 6.5: heat resistance of materials - Clause 6.5: testing of braces - Clause 7.4: dimensional change, knitted fabrics - Clause 7.4.2: performance marking - Clause 7.5: liquid penetration	24/08/07	30/04/09
EN 470-1		General requirements for protective clothing for use in welding and allied processes - Clause 1: combination of items - Clause 4.1: molten metal, accumulation in pleats - Clause 4.1: design, electrical conduction - Clause 4.3: design, pockets - Clause 5.1 and 5.3: breaking strength, textile, leather - Clause 5.2: tear resistance - Clause 5.3: dimensional change, knitted fabrics - Clause 5.3: dimensional changes, leather - Clause 5.5: Chromium (VI) content - Clause 6.1: accessories (threads, embroideries, ,seams) - Clause 6.2: high visibility garments for welding - Clause 6.2: PPE; sticking of molten metal	07/02/07	30/04/09
EN 531		Protective clothing for industrial workers exposed to heat - Categorisation - Socks - Clause 1: undergarments, certification -Clause 1: neck protector, certification - Clause 5.2: dimensional change, knitted fabrics - Clause 6: performance levels, test method - Clause 6.1: outer material, clothing assembly - Clause 6.2: accessories (threads, embroideries, seams) - Clause 6.2: flammability, washing, durability - Clause 6.5 and 6.6: large metal molten splashes, ignition - Clause 7: quick release fastening - Clause 7: pockets, pocket closures - Clause 7: molten metal, accumulation in pleats-Clause 7: zippers	18/08/06	30/04/09
EN 532-533 - prEN ISO 14116		Protective clothing against heat and flame - EN 533, clause1: materials, CE type examination - EN 533, clause 4: other garment features (threads, embroideries, seams) - EN 533, clause 4.1: materials next to the skin, incompatible properties - EN 532: flammability index, hole formation - prEN ISO 14166, clause 6.2: mechanical testing of knitted materials	24/08/03	30/04/09

Electrostatic charges EN 1149 series	Electrostatic properties - Clause 4: attachments - Clause 4 and 5: requirements, core conductor fibres - Clause 4.1: non homogeneous materials, resistivity - Clause 4.2: skin contact, incompatible properties - Clause 4.2: skin contact, earthing - prEN 1149-5: ATEX situations, fire behaviour - prEN 1149-5: requirements, materials and design – prEN 1149-5: requirements, design - prEN 1149-5: EC type examination certificate - General: durability, washing	07/02/07	30/04/09
Gloves	Barbecue gloves (EN 407) - Fire fighters' gloves (EN 659, cl. 3) - Fire fighters' gloves, marking (EN 659) - Gloves, chemical protection (EN 374) - Gloves, entanglement moving parts (no standard available) - Gloves, length (EN 374-420) - Gloves, length (EN 420) - Gloves, natural rubber, protein content (EN 420) - Gloves; protection from contact heat (EN 407) - Marking, reference to general standards (EN 420) - Mechanical testing (EN 388) - Protective clothing and gloves, pictogram ionising radiation (EN 420) - Protective devices against cold and heat (no specific standard)	24/08/07	30/04/09
High visibility EN 471 - 1150 - 13356	Clause 4.1: classification, combination of items – Clause 4.1: classification, Jacket with removable sleeves – Clause 4.1: classification, minimum area - Clause 4.1: classification, use of smallest size - Clause 4.1: classification, harnesses - Clause 4.1 and 5.1: classification, perforated materials -Clause 4.1: classification, combined performance materials – Clause 4.1 and 6.1: classification, markings on reflective trimmings - Clause 4.2: design, items not covered by the enumeration in EN 471 - Clause 4.2: design, retroreflective bands, extra trimming - Clause 4.2: design, reflective bands, arrangement - Clause 4.2: design, reflective bands, patterns - Clause 4.2: design, background material, minimum area (legs) - Clause 4.2.2: reflective bands, width and homogeneity - Clause 4.2.3: bands encircling the torso - Clause 5.1: luminance factor, washing - Clause 5.1: colour test, orientation - Clause 5.1 and 6.1: background fabric, logos - Clause 5.3: colour fastness - Clause 5.3.3: marking, bleaching - Clause 5.6.3: background material, wvp-index - Clause 6.2: washing, maximum number of cycles - Clause 8: marking, number of washing cycles – Clause 8: marking, combined performance - High visibility accessories (EN 13356) - High visibility accessories, cape for horse riders (EN 13356) - High visibility accessories, minimum area (EN 13356)	24/08/07	30/04/09
Chemical (includes biological and radioactive risks)	EN 1073-2 clause 4.2: radioactive contamination, puncture resistance - EN 13034: additional features - EN 13034 clause 4.1:	07/02/07	30/04/09

	repellency, penetration - EN 13034 clause 4.2: chemical penetration, seams etc. - EN 13034, EN 468: low level spray test - EN 13982-1 clause 6e: instructions for use; test results - EN 14126 clause 4.1.4: infective agents - EN 368 clause 1: certification, use of EN 368 - EN 368 clause 5.5: volatile liquids penetration - EN 369 clause 5.2 - permeation, collecting medium - EN 463 clause 5: test liquid - EN 463 clause 8.2: test points - EN 466 clause 6.3: jet test - EN 467: partial body protection - General: abrasion, flex cracking, breakthrough - General: abrasion, flex cracking, pressure pot - General: attached gloves and boots - General: cleaning, preconditioning for testing - General: cold protection combined with chemical protection - General: instructions for use - General: limited protection - General: pockets - General: repellency - General: test methods		
General	Abrasion testing (EN 530) - Abrasive blasting, categorization of PPE (EN ISO 14877) - Combination of clothing items (EN 340) - Comfort, practical performance testing (EN 340) - Cool environments (EN 14058) - Dimensional Change (EN 340) - Dimensional change, knitted materials (EN 340) - Electric arc (based on CLC/TS 50354) - Fire hoods, practical performance test (EN 13911) - Identification of materials (all clothing standards) - Innocuousness, plastic clothing (EN 340) - Innocuousness, azo colourants (EN 340) - Marking, reference to general standards (EN 340) - Marking, compliance with several standards (EN 533) - Paint booth clothing (no standard) - Protective clothing and gloves, pictogram ionising radiation (EN 420-340) - Reference to standards (EN 343) – Test report, reference to directive (in the absence of a standard) - Various performance levels in one garment (several standards) - Water penetration, rainwear (EN 343) – Water vapour resistance (all clothing standards) – Wildland firefighting clothing (ISO 15394) - Working garments (not protective)	24/08/07	30/04/09

Note: Recommendation for Use sheets which deal with withdrawn and / or superseded standards and which no longer apply to new certifications are published as reference for previous files.

	CO-ORDINATION OF NOTIFIED BODIES PPE **Vertical Group 5: Protective clothing and gloves** **RECOMMENDATION FOR USE**	**EN 421** **Rev.: 2007-02-07** Approval by: Horizontal Committee / Standing Committee Approved on: 19.11.2007 / 30.04.2009

This Recommendation for Use sheet contains questions and answers discussed and approved at VG 5 meetings concerning issues addressed in the following standards:

- **EN 421:1994 Protective gloves against ionizing radiation and radioactive contamination**

<table>
<tr><th>Standard and clause</th><th>Key words</th><th>Question</th><th>Proposed solution</th><th>Comments</th></tr>
<tr><td>421, 5.2</td><td>Gloves; radioactive; requirements</td><td>It is not clear which properties are compulsory and which are optional in both cases (radiation or contamination).</td><td>Properties shall be checked as follows:
<table>
<tr><th>Property</th><th>Ionising radiation</th><th>Radioactive contamination</th></tr>
<tr><td>5.1.- Lead equivalent thickness</td><td>mandatory</td><td>not mandatory</td></tr>
<tr><td>5.2.- Integrity</td><td>mandatory</td><td>mandatory</td></tr>
<tr><td>5.3.- Water vapour permeab. (1)</td><td>optional</td><td>optional</td></tr>
<tr><td>5.4.- Ozone influence (2)</td><td>optional</td><td>optional</td></tr>
<tr><td>5.5.- Mechanical strength</td><td>mandatory</td><td>mandatory</td></tr>
<tr><td>5.6.- Chemical</td><td>optional</td><td>optional</td></tr>
<tr><td>5.7.- Specific requirements</td><td>optional</td><td>optional</td></tr>
</table>
(1): only required for work in containment enclosure in anhydrous atmosphere
(2): as the mechanisms of action of ozone and ionising radiation are different, there is no obvious correlation of their influence. Specific studies should be undertaken to check if influence is similar.</td><td></td></tr>
</table>

421, 6.3.4	Water vapour permeability	There is a mistake in the formula (clause 6.3.4). $$\frac{240 * X}{A * y * z}$$ The thickness ***z*** should be in the upper part of the equation.	In order to harmonize EN 420 and EN 421 it is proposed to delete ***z*** and to use only the absolute value for the material under test. $$\frac{240 * X}{A * y}$$	

	CO-ORDINATION OF NOTIFIED BODIES PPE **Vertical Group 5: Protective clothing and gloves** **RECOMMENDATION FOR USE**	**EN 469** **Rev: 2007-08-24** Approval by: Horizontal Committee / Standing Committee Approved on: 19.11.2007 / 30.04.2009

This Recommendation for Use sheet contains questions and answers discussed and approved in VG 5 meetings concerning issues addressed by the following standards:

- **EN 469:2005 Protective clothing for firefighters - Performance requirements for protective clothing for firefighting**

Clause	Key words	Question	Proposed solution	Comment
1	Certification, separate clothing items	Is it possible to certify trousers (without the corresponding jacket) and jackets (without the corresponding trousers), if it is specified in the informative leaflet and in the certificate that they have to be worn with a jacket (resp. trousers) that fulfils the requirements of EN 469?	This is possible. The wording of the informative leaflet shall be very clear and precise.	
4.6	Closure systems	A suit has lower insulation where the zipper is placed. How low may this be, before the garment is rejected?	The lower insulation value at the place of the zipper normally generally does not cause problems and hence has not to be considered.	
4.9	Neck protection	EN 469:1995, clause 4.9, states that "the clothing shall also protect the wearer's neck". Should the collar have the same minimum performance level as the tunic?	The manufacturer shall give advice in the informative leaflet that the level of protection in the collar is lower. The user shall take that situation into account.	Original discussion on EN 469:1995; remains valid for edition 2005

5.2	Pre-treatments	§ 5.2. describes that the pre-treatment shall be carried out by washing or dry cleaning according to the manufacturer's instructions. How many washing cycles shall be carried out? The standard is not clear on that point. § 6.8 and § 6.10 refer explicitly to 5.2. for pre-treatment whereas § 5.2. already indicates which tests should be carried out on pre-treated samples and which tests on original. If the manufacturer indicates the article shall be impregnated every 5 washing cycles, shall we test surface wetting after 4 cycles to check his statement?	The following tests (reference to EN 469:2005 clauses): 6.1 Burning behaviour 6.2 Thermal transfer - flame 6.3 Thermal transfer - radiation 6.4 Remaining material strength after thermal radiation 6.9 Dimensional changes 6.11 Watertightness 6.12 Water vapour transfer resistance shall be performed after 5 care treatment cycles (washing and drying) in accordance with the manufacturer‘s instructions. **Reimpregnation shall not be carried out, even if the manufacturer‘s instructions state that that the impregnation is no longer effective after 5 cycles.** If the manufacturer stipulates a higher number of care treatment cycles, then the tests shall be performed after the stated number of care treatment cycles. The following tests (reference to EN 469:2005 clauses): 6.8 Surface wetting 6.10 Resistance to penetration of liquid chemicals shall be performed after the number of care treatment cycles (washing and drying), for which the manufacturer guarantees the impregnation, e.g. if the instructions state "reimpregnation during the third care treatment cycle", the tests shall be performed after the second care treatment cycle, i.e. before reimpregnation. If the instructions state "reimpregnation after each care treatment cycle", the tests shall be performed on new items. The PPE manufacturer shall give the following additional instructions: - The impregnating agent to be used and instructions on how to carry out reimpregnation - The number of washing cycles during which the reimpregnation remains effective. A statement regarding the innocuousness of the reimpregnation of firefighters' clothing	

5.3, 6.1	Flame spread of materials	How should internal materials which are not part of the main assembly be tested to Clause 6.1 (Flame Spread). Examples include felt and foam used for padding. Are they included in the definition of ‘component assembly’ (clause 3.4).	Internal materials which are not part of the main assembly are part of a ‘component assembly’ (clause 3.4) and should be tested to Clause 6.1 (Flame Spread) as part of an assembly, as presented in the garment, with the test flame applied to the outer surface.	
5.4	Flammability, number of washing cycles, durability	A manufacturer claims e.g. 50 washing cycles for the flame retardancy of the fabric. Shall the fabric be washed 50 times and the flame spread tested before the certification?	Testing may be omitted if an audit by an independant third party of the fabric manufacturer's quality system proves the manufacturer monitors frequently and adequately the permanency of the fire retardancy. If this quality control and documentation is missing, appropriate numbers of washings shall be carried out before testing the flame spread. However, it remains the Notified Body's decision whether or not this documentation is acceptable	
6.1	Accessories (threads, embroideries, seams)	1. The standard does not require flammability testing of accessories such as closure systemes (e.g. zips), badges/logos or seams. ----- 2. Should the thread used for seams in protective clothing against heat and flame meet special requirements? ----- 3. When and under which conditions can embroideries be applied on the garment? Should we limit the surface? Are there requirements that the yarn should fulfil? ------ 4. Should the seams of garments meet the same requirements for flammability as the main fabric?	1. The accessories have to be tested in accordance with EN 532 if they are not properly covered. ------ 2. If the material of the threads used for seams is the same as the one used for clothing it isn’t necessary to test. If not the sewing thread shall be tested. ------- 3. Embroideries in FR yarn should be accepted without restriction. Separate embroideries with non-FR yarn could be stitched to the garment afterwards. There is still a safe background. For embroideries with non-FR material, a test according EN 532 should be carried out to check if the sample fulfils the criteria. ----- 4. Yes.	*NOTE: see also EN 531 and EN 470*

6.1.6	Hardware	Clause 6.1.6 (testing and performance of "hardware") is not clear as to how to apply it. If an attempt to apply it as written is undertaken, the result is likely to be that it is not possible to certify typical firefighter clothing! **3.7** **hardware** non-fabric items used in protective clothing including those made of metal or plastic, e.g. fasteners, rank markings, buttons, zippers **4.7 Hardware** Hardware penetrating the outer material shall not be exposed on the innermost surface of the component assembly. **6.1.6** If hardware is used in protective clothing, this shall be tested separately applying the flame to the outer surface of the hardware items, according to EN ISO 15025:2002. The hardware shall function after the test.	The wording of EN 469, clause 6.1.6 has proven to be impractible and therefore it is recommended that hardware be tested by applying the flame to the outer surface of the region of the clothing containing the hardware, e.g. a closure system. If the hardware is a closure system, it shall function after the test. If there is hardware inside the clothing that might be exposed to flame, for example within 10 cm of the hem of the jacket, this system shall be tested by exposing the item directly to the flame. The item shall not give molten or flaming debris and shall give an afterflame time of not more than 2 s.	Refers to EN 469:2005
6.4, 7.5	Radiant heat, residual strength	Is it acceptable to approve a textile according to EN 469 without testing the residual strength of material to radiant heat (EN 366 method A) (6.4) and penetration by liquid chemicals (EN 368), in particular to "white spirit" (7.5), i.e. are this basic requirements?	No. The product shall comply with <u>all</u> essential requirements [of EN 469 in order to be marked with EN 469].	
6.5	Heat resistance of materials	Are internal and external materials, which are not part of the main assembly, part of the 'clothing assembly', and should they be tested to Clause 6.5 (Heat Resistance). Examples include felt and foam used for padding, kneepad fabric, loops and webbing, and reinforcement fabric on hems.	These materials are part of the 'clothing assembly' and should be tested to Clause 6.5 (Heat Resistance)	
6.5	Testing of braces	Should trouser braces be tested to EN 469? If they should be tested, are they a 'material' (clause 3.11) or 'hardware' (clause 3.7).	Braces, which will not be exposed to flame in use, do not need to be tested to EN 469, 6.1. Braces should be tested to Clause 6.5 (Heat Resistance).	

7.4	Dimensional change, knitted fabrics	The 3% maximum change quoted in these specifications is neither appropriate nor accurately measurable for knitted fabrics.	The 3% figure is maintained as a rule. The notified body may judge as an expert opinion that the knitted material is stretchable enough not to affect the protective properties, and a higher shrinkage is acceptable. The real shrinkage should be mentioned in the information for use.	See also EN 531 and EN 470
7.4.2	Performance marking	When an EN 469:2005 garment meets Level 2 for Radiant and Convective Heat for all assemblies, should it be marked: Xf2 Xr2 Or can it be marked: X2	Both solutions may be used, but X2 may only be used if both Xf2 and Xr2 levels are obtained. According to WG 2 the notion Xf2Xr2 is to be preferred. WG 2 will be asked for clarification in the next amendment or revision of the standard.	
7.5	Liquid penetration	How can one perform an EN 368 test on retroreflective elements?	The liquid penetration test should not be performed on retroreflective material.	

	CO-ORDINATION OF NOTIFIED BODIES PPE **Vertical Group 5: Protective clothing and gloves** **RECOMMENDATION FOR USE**	**EN 470-1** **Rev.: 2007-02-07**	
		Approval by: Horizontal Committee Standing Committee	Approved on: 19.11.2007 30.04.2009

This Recommendation for Use sheet contains questions and answers discussed and approved at VG 5 meetings concerning issues addressed in the following standards:

- **EN 470-1:1995 Protective clothing for use in welding and allied processes - Part 1: General requirements**

Clause	Key words	Question	Proposed solution	Comment
1	Combination of items	A manufacturer produces a vest, sleeves that can be attached to the vest or can be used separately, apron and gaiters for welders, all made of the same material. Can he submit one technical file containing designs, etc for all of them? In such a case, should each garment, separately bear the CE marking	It is possible to submit one technical file for all products. This depends on the intended use. If the manufacturer points out in the information leaflet that they must always be used all together, then one certification shall be carried out. If not, several separate certifications are possible.	Will remain valid when EN ISO 11611 is approved – not addressed, but generally applicable to PPE clothing
4.1	Molten metal, accumulation in pleats	Can a garment have open pleats in the back? At the bottom of the pleat, a diagonally stitch could prevent entrapment. Is this sufficient and/or necessary?	Yes, if measures like diagonal stitches are provided to avoid molten metal to be entrapped.	Will remain valid when EN ISO 11611 is approved
4.1	Design, electrical conduction	1. Shall metal fasteners be covered on both sides, the inner side and the outer side? ------ 2. In case a zipper is used: should it be covered when made of metal to prevent electrical conduction (as per EN 470-1) or should it be treated as to prevent sticking of the molten metal (as per EN 531 D and E).	1. Covering the metal parts from one side (outside or inside) is sufficient. ------ 2. The outside of the zippers shall be covered	Item 1 will become superfluous when prEN ISO 11611 is accepted – addressed by 4.1 Item 2 will remain valid when EN ISO 11611 is approved – draft has no requirement to cover zip

4.3	Design, pockets	1.What is actually meant by “not be capable of being tucked into pocket”? ---- 2. Clause 4.3 states "If trousers have pockets, these shall be side pockets only …". Does this also apply to the trousers part of a one-piece coverall? ---- 3. The standard includes requirements for the pockets, but what about the pass-through.	1. The additional garment requirements given in EN 531 (clause 3) could also be applied also for the welders' clothing. It specifies that the external pockets on jackets and overalls shall be covered by flaps at least 20 mm wider than the pockets to avoid the flap being tucked into the pocket. ----- 2. Pockets on the back of the trousers are acceptable, if they have flaps (except the rule-pocket) and if the proper user's information is given. ----- 3. It shall be possible to close all openings to avoid molten metal to enter.	Items 1 and 2. will become superfluous when prEN ISO 11611 is accepted (addressed by 4.3 (EN 470-1 amd.1998) and 4.3 of prEN ISO 11611) Item 3 will become superfluous when prEN ISO 11611 is accepted – addressed by 4.3
5.1, 5.3	Breaking strength, textile, leather.	Two methods are specified: ISO 5081 for textile ISO 3376 for leather. The width of test specimens is 5 cm for textile and 1 cm for leather. Breaking strength requirements should be correlated to the width of the sample.	The results obtained with the ISO 3376 method for leather should be multiplied by 5.	Will become superfluous when prEN ISO 11611 is accepted – addressed by 6.1 and 6.5 Note: ISO 5081 has been superseded by EN ISO 13934-1
5.2	Tear resistance	The tear resistance is measured in accordance with ISO 4674 but the method to use is not specified. Is it A_1 or A_2?	Method A_1 should be used in accordance with the document WG1/PG3/N40.	Will become superfluous when prEN ISO 11611 is accepted – addressed by 6.2
5.3	Dimensional change, knitted fabrics,	The 3% maximum change quoted in these specifications is neither appropriate nor accurately measurable for knitted fabrics.	The 3% figure is maintained as a rule. However the notified body may judge as its expert opinion that the knitted material is stretchable enough not to affect the protective properties and a higher shrinkage is acceptable. This should be mentioned in the information for use.	Will become superfluous when prEN ISO 11611 is accepted – addressed by 6.4 See also EN 469 and EN 531
5.3	Dimensional changes, leather	Dimensional stability is determined after exposure to 200ºC for 15 min. These conditions of tests are not proportional to the conditions of use and the essential requirements.	1. We propose 100ºC during 15 min. The shrinkage shall be < 5%.	Will become superfluous when prEN ISO 11611 is accepted – addressed by 6.1 and 6.5

5.5	Chromium (VI) content	1. Chromium content of gloves has to be measured even if the glove has a liner. For an apron or jacket in leather there is no requirement for chromium content. A glove with a liner however is a similar situation as a jacket worn over a shirt. ---------- 2. A welders' jacket and apron was found to conatain more than 10 ppm Cr^{+6}. EN 470-1 doesn't refer to Cr6+. Can this jacket bear the CE marking?	1. This is clearly an omission. The text of prEN ISO 11611 (6.11.2) corrects this and makes Cr(VI)-determination mandatory ---------- 2. No, this is a general requirement, common to all types of protective clothing. Protective clothing should not contain harmful substances	Will become superfluous when prEN ISO 11611 is accepted – addressed in 6.11.2, but limit needs altering from 2 to 10
6.1	Accessories (threads, embroideries, seams)	1. The standard does not require flammability testing of accessories such as closure systemes (e.g. zips), badges/logos or seams. ------ 2. Should the thread used for seams in protective clothing against heat and flame meet special requirements? ------- 3. When and under which conditions can embroideries be applied on the garment? Should the surface be limited? Are there requirements for the yarns? ------ 4. Should the seams of garments meet the same requirements for flammability as the main fabric?	1. The accessories have to be tested in accordance with EN 532 if they are not covered. ------- 2. If the material of the threads used for seams is the same as the one used for clothing it isn't necessary to test. If not, the sewing thread shall be tested. -------- 3. Embroideries in FR yarn should be accepted without restriction. Separate embroideries with non-FR yarn could be stitched to the garment afterwards. There is still a safe background. For embroideries with non-FR material, a test according EN 532 should be carried out to check if the sample fulfils the criteria. ------ 4. Yes.	Items 1,2,3 will remain valid when EN ISO 11611 is approved – seams are tested (6.6) but no other items Item 4 will become superfluous when prEN ISO 11611 is accepted – addressed by 6.6, seams are tested. See also EN 469 and EN 531
6.2	High visibility garments for welding.	Should the retroreflective material be tested to EN 348 (Molten metal) as well as to EN 532 (burning behaviour) for high visibility garments used for welding operations?	Yes, they shall fulfil the requirements for welder's protective clothing.	Will remain valid when EN ISO 11611 is approved

6.2	PPE; sticking of molten metal	How to classify a garment when it ignites when drops of molten metal stick on the material?	This material shall be considered not suitable for use in a protective garment of glove for welding.	Will become superfluous when prEN ISO 11611 is accepted – addressed by 6.7 See also EN 348 and EN 407

	CO-ORDINATION OF NOTIFIED BODIES PPE **Vertical Group 5: Protective clothing and gloves** **RECOMMENDATION FOR USE**	**EN 531** **Rev.: 2007-02-07**	
		Approval by: Horizontal Committee Standing Committee	Approved on: 19.11.2007 30.04.2009

This Recommendation for Use sheet contains questions and answers discussed and approved at VG 5 meetings concerning issues addressed in the following standards:

- **EN 531:1995 Protective clothing for industrial workers exposed to heat (excluding firefighters' and welders' clothing)**

Clause	Key words	Question	Proposed solution	Comment
-	Categorisation	Under which conditions shall products complying with EN 407, EN 469 or EN 531 belong to category 3?	It is a manufacturer's decision which should be in accordance with the intended use and the risk. The notified body has the right to disagree with the manufacturer's decision (see Annex to this sheet for guidance) The information leaflet shall contain the appropriate information	Will remain valid after approval of EN ISO 11612
-	Socks	Is it possible to certify socks according to EN 531, protective clothing against heat and flame?	Socks can not be certified against EN 531, which is a standard for complete clothing. Certification of these PPE against the basic requirements of the PPE directive is always possible. In the certification process relevant elements and test methods quoted in EN 531 may be used.	
1	Undergarments, certification	According to the scope EN 531 applies to outer garments. How should the undergarments, tested according to this standard, be certified?	Certification to be done according to the essential safety requirements of the Directive. The classification of performance levels according to EN 531 can be given in the user's information. It shall be indicated that the undergarment must not be used alone, but in combination with outer garments.	Will remain valid after approval of EN ISO 11612

1	Neck protector, certification	Can a neck protector be certified as a PPE against thermal risks?	In principle yes, but the interface between neck protector and garment (and other PPE) shall be checked. Elements from EN 531 may be used to assess the thermal behaviour, although neck protectors are not included in the scope of EN 531, like e.g. hoods.	Will remain valid after approval of EN ISO 11612
5.2	Dimensional change, knitted fabrics	The 3% maximum change quoted in these specifications is neither appropriate nor accurately measurable for knitted fabrics.	The 3% figure is maintained as a rule. The notified body may judge as an expert opinion that the knitted material is stretchable enough not to affect the protective properties, and a higher shrinkage is acceptable. The real shrinkage should be mentioned in the information for use. See also EN 469 and EN 470	Will become superfluous after approval of EN ISO 11612 (addressed in 6.4.2)
6	Performance levels, test method.	One of the components of flame and heat protective clothing, including specialised fire fighter's clothing, is a hood incorporating a visor. However the standards make no reference to tests (optical and thermal) or performance levels for the visor. The same applies to some respiratory requirements, like dead space. What shall be checked by the notified body?	The notified body shall conduct the necessary tests for these respiratory and optical protection components to establish conformity with the basic health and safety requirements (in accordance with the intended use).	Will remain valid after approval of EN ISO 11612
6.1	Outer material, clothing assembly	How can we consider a trouser with an inner lining? Is the lining considered a part of the outer material, or a clothing assembly? Shall this inner lining be non-flammable or can a flammable lining be acceptable?	This lining shall in principle be non flammable and shall not melt in order to be in accordance with the essential requirements (Annex II, clause 3.6.1 of EC directive 89/686). But if, in use,the liner does not represent a flammability risk, then a flammable liner may be used	Will become superfluous after approval of EN ISO 11612 (addressed in 6.3.3.1.4 or 6.3.3.2.4)
6.2	Accessories (threads, embroideries, seams)	1. The standard does not require flammability testing of accessories such as closure systemes (e.g. zips), badges/logos or seams. ----- 2. Should the thread used for seams in protective clothing against heat and flame meet special requirements? ----- 3. When and under which conditions can embroideries be applied on the garment? Should	1. The accessories have to be tested in accordance with EN 532 if they are not properly covered. ------ 2. If the material of the threads used for seams is the same as the one used for clothing it isn't necessary to test. If not the sewing thread shall be tested. ------- 3. Embroideries in FR yarn should be accepted without restriction.	Items 1 to 3 will remain valid after approval of EN ISO 11612 (Annex B is informative) Item 4 will become superfluous after approval of EN ISO 11612 (addressed by 6.3.1).

		we limit the surface? Are there requirements that the yarn should fulfil? ------ 4. Should the seams of garments meet the same requirements for flammability as the main fabric?	Separate embroideries with non-FR yarn could be stitched to the garment afterwards. There is still a safe background. For embroideries with non-FR material, a test according EN 532 should be carried out to check if the sample fulfils the criteria. ----- 4. Yes. *NOTE: see also EN 469 and EN 470*	
6.2	Flammability, washing, durability	1. Why is flame behaviour verified only after 5 washing cycles, and not in accordance with the number of cycles claimed by the manufacturer's notice of use? What about flame retardant treatments which are efficient for only a limited number of cycles ---------- 2. Manufacturer claims e.g. 50 washing cycles for the flame retardancy of the fabric. Shall the fabric be washed 50 times and the flame spread tested before the certification?	1. If the notified body knows that cleaning doesn't affect the properties of the materials, then 5 cleaning cycles are sufficient. If the notified body. doesn't k now the effect of cleaning then the number of cleaning cycles, stated by the manufacturer, shall be applied before testing ---------- 2. Testing may be omitted if an audit by an independant third party of the fabric manufacturer's quality system proves the manufacturer monitors frequently and adequately the permanency of the fire retardancy. If this quality control and documentation is missing, appropriate numbers of washings shall be carried out before testing the flame spread. However, it remains the Notified Body's decision whether or not this documentation is acceptable	Will remain valid after approval of EN ISO 11612
6.5, 6.6	Large metal molten splashes, ignition	Shall we accept samples when large metal molten splashes stick on the material and set the material on flame?	During the large metal molten splashes test, the material shall not ignite.	Will remain valid after approval of EN ISO 11612
7	Quick release fastening.	*"Quick release fastening shall be provided to enable rapid removal in an emergency"*. What is meant with a quick release fastening? Can a zipper be regarded as a quick release fastening?	For these kinds of garments other closing/opening techniques shall be used. If the manufacturer proposes clothing with zippers, the Notified Body shall check if the opening time of the zipper is in relation with the risk. The manufacturer has to specify in the instruction for use how the quick release system works.	Will remain valid after approval of EN ISO 11612 (Annex B is informative)

7	Pockets, pocket closures	1. All external pockets in jackets and coveralls need a flap 20-mm wider than the pocket. Is this also required for vertical pockets in the trousers of a coverall ----- 2. Can a zipper be used for closing a pocket? ----- 3. Trouser pockets with vertical openings do not need flaps. If jackets have vertical pockets, they do need flaps. Some manufacturers propose flaps as an extension of the opening. Is this useful? ----- 4. Are the pocket requirements also valid for a pass-through? Does it need to be closed over its entire length? ----- 5. Can an antenna (e.g. of a cell phone or walkie-talkie) stick out of the pocket flap through an opening?	1. For performance categories D and E the pockets shall be closeable. The recommendations in EN 470 should be taken into account. ----- 2. Yes, if covered by a flap. ----- 3. The flap should be in the opposite direction or perpendicular to the opening ----- 4. It shall be possible to close all openings fully to avoid molten metal to enter. ------ 5. No, the pocket shall be closed over all its length	Will remain valid after approval of EN ISO 11612 (Annex B is informative) See also EN 470
7	Molten metal, accumulation in pleats	Can a garment have open pleats in the back? At the bottom of the pleat, a diagonally stitch could prevent entrapment of molten metal. Is this sufficient and/or necessary?	Yes, if measures like diagonal stitches are provided to avoid molten metal to be entrapped.	Will remain valid after approval of EN ISO 11612 (Annex B is informative)
7	zippers	The standard requires that metal zippers are covered or treated in order to prevent molten metal to stick to the zipper. Does this mean that plastic zippers can remain uncovered?	For this type of intended use zippers shall always be covered.	Will remain valid after approval of EN ISO 11612 (Annex B is informative)

Annex to question "categorisation": category III (underlined)

Property ® **Product standard**	Burning behaviour - Afterflame time (s) - Afterglow time (s)	Convective heat (EN 367) - HTI (s)	Radiant heat (20 kW/m^2)	Contact heat - Contact temp (ºC) - Parn threshold time (s)	Welding drops - Number of drops	Molten metal splashes mass (g) - Aluminium - Iron
EN 469 Protective clothing for firefighters (category 3)		HTI>13	>22 (40 Kw/m^2)			
EN 531 Protective clothing for industrial workers exposed to heat (category 2 or 3) **Levels**	A	B	C			D/E
		>31				
		21-30	>151			
	<2 <2	13-20	91-150			>201 >351
		7-12	31-90			121-200 201-350
		3-6	8-30			60-120 100-200
EN 407 Protective gloves against thermal risks (category 2 or 3) **Levels**	< 2 < 5	> 18	> 150	500 > 15	> 35	200
	< 3 < 25	> 10	> 90	350 > 15	> 25	120
	< 10 <120	> 7	> 30	250 > 15	> 15	60
	< 20	> 4	> 5	100 > 15	> 5	30

	CO-ORDINATION OF NOTIFIED BODIES PPE **Vertical Group 5: Protective clothing and gloves** **RECOMMENDATION FOR USE**	**EN 532-533 – prEN ISO 14116** **Rev.: 2007-08-24** Approval by: Horizontal Committee / Standing Committee Approved on: 19.11.2007 / 30.04.2009

This Recommendation for Use sheet contains questions and answers discussed and approved at VG 5 meeting concerning issues addressed in the following standards:

- **EN 532:1994 Protective clothing – Protection against heat and flame – Test method for limited flame spread (superseded by EN ISO 15025:2002)**
- **EN 533:1997 Protective clothing – Protection against heat and flame – Limited flame spread materials and material assemblies**

Standard and Clause	Key words	Question	Proposed solution	Comment
EN 533, 1	Materials, CE type examination	EN 533 is a performance specification for materials only. Is it possible to obtain a CE type examination certificate for protective garments against flames, based on EN 533?	A protective garment against flames has to fulfil the essential safety requirements. Based on the risk assessment the relevant harmonised standards should be applied (EN 340, EN 1149, EN 531, EN 533, etc.). If the material has to be tested, EN 533 applies and can/should be mentionned on the marking/information for use (materials tested according to EN 533).	Will become superfluous after approval of prEN ISO 14116, which addresses both materials and garments
EN 533, 4	Other garment features (threads,embroideries, seams	1. The standard does not require flammability testing of accessories such as closure systemes (e.g. zips), badges/logos or seams. ----- 2. Should the thread used for seams in protective clothing against heat and flame meet special requirements?	1. The accessories have to be tested in accordance with EN 532 if they are not covered. ------- 2. If the material of the threads used for seams is the same as the one used for clothing it isn't necessary to test. If not the sewing thread shall be tested.	Item 4 will become superfluous after approval of prEN ISO 14116, which provides for a seam test Items 1 to 3 will remain valid

		------- 3. When and under which conditions can embroideries be applied on the garment? Should we limit the surface? Are there requirements that the yarn should fulfil? -------- 4. Should the seams of garments meet the same requirements for flammability as the main fabric?	------- 3. Embroideries in FR yarn should be accepted without restriction. Separate embroideries with non-FR yarn could be stitched to the garment afterwards. There is still a safe background. For embroideries applied on non-FR material, a test according EN 532 should be carried out to check if the sample fulfils the criteria. -------- 4. Yes. *NOTE: see also EN 469, EN 470 and EN 531 (where applicable)*	
EN 533, 4.1	Materials next to the skin, incompatible properties	EN 533 forbids contact between the skin and an index 1 material. EN 1149-1 on the other hand requires a sufficient contact between the antistatic side of the fabric and the skin. Does this mean that e.g. a PU-coated antistatic material can not be used for a combined protection against both risks.	An other material which meets the index 2 requirement of EN 533 and the dielectric requirements of EN 1149-1 should be used to ensure continuity (e.g. at wrists, ankles and neck)	Will remain valid after approval of prEN ISO 14116
EN 532	Flammability index – hole formation	When tested in accordance with EN 532 (or EN ISO 15025) some materials show a discontinuous hole, i.e. a hole crossed by fragments or threads of remaining fabric. In the case of some coated fabrics the coating burns away and leaves a charred scrim of fabric behind. Is it possible to qualify this type of material with an index higher than 1?	A discontinuous hole (larger than 5x5 mm) is a hole and such materials can not be characterized as index 2 or 3 materials. They should not be compared with real index 2 or 3 materials and their use should be limited to parts of the clothing, which do not come into contact with the skin. In the instructions for use clear warning should be given not to wear these materials in contact with the skin.	

prEN ISO 14116, 6.2	Mechanical testing of knitted materials	prEN ISO 11611 and prEN ISO 11612, which will replace EN 470 and EN 531, both include tensile, tear, and seam strength tests and also burst strength tests for knitted materials. The related draft prEN ISO 14116, which will replace EN 533, includes tensile, tear, and seam strength tests, but does not include burst strength for knitted materials (FDIS dated 2006). We have often been told that harmonised standards should include at least one basic mechanical requirement. The tensile, tear and seam strength tests are not suitable for knitted materials	When EN ISO 14116 is adopted, we propose to test knitted materials for burst strength to EN ISO 13938-1, to align the standard with EN ISO 11611 and EN ISO 11612. The minimum requirement should be Class 1 of EN 14325, Table 5, i.e. a minimum of 40 kPa. Seams of knitted materials shall also be tested for burst strength and classified in the same way. This will be brought to the attention of WG 2 in view of an amendment to EN ISO 14116.	

	CO-ORDINATION OF NOTIFIED BODIES PPE **Vertical Group 5: Protective clothing and gloves** **RECOMMENDATION FOR USE**	**Electrostatic charges EN 1149 series** **Rev.: 2007-02-07** Approval by: Horizontal Committee / Standing Committee Approved on: 19.11.2007 / 30.04.2009

This Recommendation for Use sheet contains questions and answers discussed and approved at VG 5 meetings on issues addressed in the following standards:

- **EN 1149-1: Protective clothing - Electrostatic properties - Part 1: Test method for measurement of surface resistivity (editions 1995 and 2006)**
- **EN 1149-2:1997 Protective clothing - Electrostatic properties - Part 2: Test method for measurement of the electrical resistance through a material (vertical resistance)**
- **EN 1149-3:2004 Protective clothing - Electrostatic properties - Part 3: Test methods for measurement of charge decay**
- **prEN 1149-5:2005 Protective clothing – Electrostatic properties – Part 5: Performance requirements**

Standard and Clause	Key words	Question	Proposed solution	Comment
EN 1149-1, 4	attachments	What are the requirements for external attachments (e.g. badges, reflective stripes) larger than 4 cm for electrostatic dissipative protective clothing according to EN 1149-1?	The external attachment materials have to meet the same requirements of EN 1149-1 as the clothing material. This is recommended as a clear and safe solution in order to avoid a solution depending on the size of attachment, hazardous area clothing material, etc. In other cases special assessment is necessary, e.g. reflective stripes are allowed if directly applied on an antistatic material.	

4, 5	Requirements, core conductor fibres	EN 1149-1 specifies a test method and requirements for surface resistivity but the test method is not applicable to materials with core conducting fibres, which can be tested in accordance with EN 1149-3. What are the requirements for these materials?	Use requirements in prEN 1149-3:2001-05, annex A Note: EN 1149-3:2004 does not specify these requirements anymore. They will be included in the future EN 1149-5.	
4.1	Non homogeneous materials, resistivity	EN 1149-1 clause 4.1 states following maximum resistivity requirements: - for homogeneous materials: lower than $5 \cdot 10^{10}$ • according to clause 5 (test method). - for non-homogeneous coated or laminated materials: resistivity must be almost on one surface, according to requirements for homogeneous materials. - for non-homogeneous materials with conductive threads: not exceed 10^9 • almost on one face of the material. How should we interpret the resistivity requirement for non-homogeneous materials with conductive threads: as an exact value, i.e. 1.0×10^9 Ω or as a range, i.e. between 1.10^9 and 1.10^{10} Ω?	The revised version of EN 1149-1 is exclusively a test method and does not contain any requirement provisions anymore. prEN 1149-5 is being developed as a product specification standard. The final draft of this standard (version 2006/05) quotes following material requirements: An electrostatic dissipative material shall meet at least one of the following requirements: — t50% < 4 s or S > 0,2 tested according to EN 1149-3, test method 2 (induction charging) or — a surface resistance of less than or equal to $2{,}5 \times 10^9$ Ω,• on at least one surface, tested according to EN 1149-1. For a material containing conductive threads in a stripe or grid pattern the spacing of the conductive threads in one direction shall not exceed 10 mm in any part of the garment.	
4.2	Skin contact, incompatible properties	EN 1149-1 requires a sufficient contact between the antistatic side of the fabric and the skin. EN 533 on the other hand forbids contact between skin and an index 1 material. This means a typical PU coated antistatic material could not be used for a combined protection against both risks.	An other material which meets the index 2 requirement of EN 533 and the dielectric requirements of EN 1149-1 should be used to ensure continuity (e.g. at wrists, ankles and neck)	
4.2	skin contact, earthing	The standard specifies that skin contact is necessary. In case this is not possible the garment should be earthed directly. Skin contact is only relevant in case the	Yes, this should be part of the instructions. Permanent earthing of the person requires dissipative footwear <u>and</u> a dissipative and earthed floor.	

		garment is combined with the right type of footwear. Shouldn't it be necessary to add this in the instructions, as the standard does not require it?	Note: This requirement is intended to be part of a future EN 1149-5 (product standard for protective clothing to prevent accumulation of electrostatic charges).	
prEN 1149-5	ATEX situations, fire behaviour	Clothing meets the requirements of prEN 1149-5 with regard to its design and electrostatic dissipation properties and will be used in an ATEX situation (possible risk of explosion and fire). Can this clothing be certified even when it offers no protection against flames, i.e. can prEN 1149-5 alone be used for certification in this case?	prEN 1149-5 addresses only the issue of electrostatic dissipation. When other risks are likely to occur in conjunction with electrostatic accumulation (which is almost always the case) the requirements of prEN 1149-5 shall be completed by the requirements of (an) other relevant product standard(s). In this specific case because the intended use includes a clear risk of fire. In such case the garment should offer a protection against that risk (cfr. directive art. 10.4.b). In addition the scope of prEN 1149-5 refers to the risk of "incendiary discharges".	
prEN 1149-5	Requirements, materials and design	Could we take pr EN 1149-5 (2004) as the basis for type examination of electrostatic properties of antistatic clothing made of textile with metal core yarn? Especialy that in EN 1149-3 (2004) no material and design requirements are included. Some notified bodies take the standard prEN 1149-3 (2001) as the basis for type examination, where requirements for material and design are included.	prEN 1149-5 has been developed to deal with the design and material requirements. At this moment it is the most up-to-date document available. prEN 1149-3:2001 has been superseded by EN 1149-3:2004 and should no longer be used.	
prEN 1149-5	Requirements, design	According to prEN 1149-5, clause 4.2.1 (material requirements) an electrostatic dissipative material shall have a surface resistance of less than or equal to $2{,}5 \times 10^{9}$ Ω,• on at least one surface, tested according to EN 1149-1. According to prEN 1149-5, clause 4.2.2 (design requirements), the outermost material of an electrostatic dissipative protective clothing, which comprises multiple layers, shall meet the material requirements.	The dissipative layer shall meet the material requirements and can be used as the outer face or as the inner face of the outer layer of a material assembly.	

		However, the placing of the dissipative surface is not specified. Shall the dissipative surface of the material be oriented towards the outside, i.e. the side exposed to the risk?		
prEN 1149-5	EC type examination certificate	Is it allowed to indicate compliance with prEN 1149–5 (at present a prEN) on an EC type examination certificate, if clothing with antistatic properties after testing according to EN 1149–3 conforms to requirements of pr EN 1149–5 ?	Yes, this is possible. Certificates are issued against the basic requirements of the Directive. Reference to the technical documents (harmonised standards and others) used to prove compliance with these basic requirements can be made on the certificate.	
general	Durability, washing	If the producer declares in the manufacturer's information that the electrostatic properties of clothing made of metal core yarn are maintained after 50 cycles of treatment (washing), does the notified body have to check if the material has been tested after declared number of cycles?	Yes, according to the labelling instructions of EN 340. It is the notified body's task to verify this, either by requiring proof from the manufacturer or by testing it in its own laboratory.	

	CO-ORDINATION OF NOTIFIED BODIES PPE **Vertical Group 5: Protective clothing and gloves** **RECOMMENDATION FOR USE**	**Gloves** **Rev.: 2007-08-24** Approval by: Horizontal Committee, Standing Committee Approved on: 19.11.2007, 30.04.2009

This Recommendation for Use sheet contains questions and answers discussed at VG 5 meetings concerning issues addressed in the following standards:

- **EN 420:2003 Protective gloves - General requirements and test methods**
- **EN 407:2004 Protective gloves against thermal risks (heat and/or fire)**
- **EN 374-1:2003 Protective gloves against chemicals and micro-organisms - Part 1: Terminology and performance requirements**
- **EN 511-2006 Protective gloves against cold**
- **EN 388-2003: Protective gloves against mechanical risks**
- **EN 659:2003: Protective gloves for firefighters**

Standard and Clause	Key words	Question	Proposed solution	Comments
EN 407	Barbecue gloves	Are gloves for use at a barbecue PPE category 2, if they are intended for professional use? If yes, what shall we test? Whole EN 407 or just parts of it?	This type of glove should be considered PPE cat 2 (see also recommendation for use sheet to EN 531) As there is no specific product standard for this, following elements from EN 407 could be used for testing: - flame resistance; - resistance to contact heat - resistance to convective heat.	-

EN 659, 3	Fire fighters' gloves	The general requirements (clause 3.1) demand separate tests if the material in front and/or back of the glove is different. Clause 3.8 (convective heat) requires sampling from palm and back. Clause 3.9 (radiant heat) requires sampling from the back. Can we accept a reduced protection at the side of the fingers because it's neither front nor back ? If the assembly construction in these parts is different from front/back, a different (reduced ?) protection performance can be expected.	The assembly at the side part of the glove's fingers should be tested on convective heat insulation, if it deviates from the assembly at the front/back of the gloves.	
EN 659	Fire fighters' gloves, marking	The EN 659 requires the marking of the gloves : Every protective glove must be marked with the number of this standard, EN 659, and the pictogram  **Furthermore the marking must be carried out according to the requirements of EN 420 .** The EN 420 says in 7.2.1.1. e : "The number of the specific standard and the performance levels must be indicated ." Does it mean we have to put all performance levels on the gloves ?	Only the pictogram and the number of the standard should be on the gloves. Performance levels shall be explained in the user's information	
EN 374	Gloves, chemical protection	We have certified a chemical protective glove using standard EN 374-1: 1993 a few years ago. For this certification, a few chemical products representative of the real conditions of use of the equipment were tested (nitric acid, tributylphosphate, hydrogen peroxide and	Solution 1: keep the EC type certificate as it is and don't use EN 374-1 (2003) to assess the glove. or Solution 2: certify the glove according to EN 374-1 (2003) but for "low chemical protection".	

		caustic soda). Today, the manufacturer of this equipment wishes to have a certification according to the revised version of EN 374-1 (version 2003). But the problem is that the glove isn't able to get a class 2 for 3 of the 12 chemical products listed in annex A of the standard.	The term "low chemical protection" should be clearly explained in the information for use, as it could be interpreted as low level protection. In the context of the standard it just means "protection against a narrow range of chemicals" NOTE: The wording of the standard is not clear for the end-user. "Low chemical protection" means "not protecting against a broad range of chemicals". It could mean protection against specific very harmful chemicals. To be communicated to WG 8 for consideration when revising or amending EN 374-1.	
no standard available	Gloves, entanglement moving parts	No standard has taken into account this risk for protective gloves. Gloves made with high tensile strength fibres could be very dangerous because they will not easily tear when caught by a moving machine.	A warning shall be given in the information leaflet	
EN 374-420	Gloves, length	EN 374-1 clause 5.1 states that minimum liquid proof glove length shall be at least equal to the minimum length specified in EN 420. Can clause 5.1.3 of EN 420:2003 be applied i.e. "....gloves designed for special applications may not conform to the values of table 3" (minimum lengths)? Medical examination gloves are made to a 240 mm length specified in EN 455. They do not comply with EN 420 lengths above size 8 but are clearly for a "special application" and are increasingly submitted for certification to EN 374-1 claiming categories of chemical and/or micro-biological protection.	Medical examination gloves that are claimed to protect against chemicals should meet the requirements of both standards. The exemption clause of EN 420 can not be applied here.	
EN 420	Gloves, length	Is it possible to issue a (positive) Test Report of EC Type-Testing and the subsequent EC Type-Certificate for gloves shorter than the minimum length as given in EN 420:2003, 5.1.2, Table 3.; if the opinion of the Notified Body is that this does not have an impact on the intended use of the gloves?	PPE Guidelines (p. 27 commenting art. 10.4) states: The information to be supplied by the manufacturer must specify the intended use of the PPE and the risks covered. It is up to the manufacturer to indicate clearly the areas of use and the nature and scale of the risks to be covered. EN 420, 5.1.3 states that a shorter glove length is only justified by a specific use of the glove. It is up to the manufacturer to prove that the risks associated with the intended use of the glove are such a specific use, which justifies a shorter glove length.	

EN 420	Gloves, natural rubber, protein content	EN 420 (2003) foresees the determination of extractable protein content for natural rubber latex gloves in section 4.3.4. Is this mandatory for natural rubber gloves that are worn with under-gloves (this is the case of containment enclosure gloves)?	Strictly spoken the test should be carried out, but it gives no useful information. Therefore warnings should be given in the information for use: - A warning mentioning that this glove is liable to cause allergies due to the natural rubber - A wording indicating that this glove has to be worn with under-gloves of at least the same length as the rubber glove	
EN 407	Gloves; protection from contact heat	Which category of PPE is the most appropriate one for gloves of performance level "1" (test at 100ºC)	Category II The manufacturer is responsible for product categorisation.	
EN 420	Marking, reference to general standards	Is it possible to use EN 340 (EN 420) alone, when no EN product standard is applicable and to put the EN 340 number on the marking?	Marking with the general standards EN 340 or EN 420 is not possible. If there is no product standard, then no normative reference should appear on the marking.	
EN 388	Mechanical testing	How should one test and evaluate the mechanical protection level according to EN 388:2003 of the following gloves? (see photographs of gloves a to d below). What should be on the pictogram? a) Gloves with reinforcement patches almost completely covering the palm and thumb: 	The results obtained on the weakest parts of the structure should be considered for the marking. This is sometimes in contradiction with taking the specimens from the palm of the glove. The informative notice shall give clear information on the meaning of the markings. Glove a) Abrasion resistance: test on the complete structure, not on the separate materials. Tear strength of the reinforcement patches should be tested and taken into account if higher than that of the other materials in the palm structure. Puncture and cut resistance should be tested on the weakest spots. Glove b) For cut, tear and puncture see solution a) For abrasion use solution a) if the fingers are reinforced and solution c) if they are not. Glove c) Test without taking into account the reinforcement patches, but make a note in the consumer information	

		b) Gloves with reinforcement patches almost completely covering the palm but not the thumb:  c) Gloves with reinforcement patches covering some places on the palm and thumb:  d) Gloves with only the palm reinforced by stitches. The abrasion and cut resistance of the complete structure is clearly higher than that of the component materials (outer layer and lining): 	brochure stating that the areas covered by reinforcement patches may have a higher protection level. Glove d) Abrasion and cutting: test with the stitches, it will be impossible to take test specimens otherwise. Tear: on separate layers. Puncture: on all layers together.	

EN 420	Protective clothing and gloves, pictogram ionising radiation	EN 420 (2003) foresees a pictogram for protective gloves against ionising radiation whereas EN 340 (2003) doesn't foresee any pictogram against this risk. How do we have to proceed for protective clothing providing protection against ionising radiations?	Use for protective clothing against ionising radiations the same pictogram as for gloves. The meaning of the pictogram shall be explained in the information for use.	
no specific standard	Protective devices against cold and heat	Is the device shown in the figure a PPE? It is a silicone rubber mitt used for carrying hot or cold objects, mainly in laboratories. The device withstands temperatures from -57 to 260 deg C. Thumb and fingers fit into end pockets. The gripping surface is equipped with multiple concave tipped studs.. Which are the relevant test methods?	This is a PPE since it meets the definition of a PPE as specified in the Directive. A certification is possible according to the Directive. Elements from EN 420 and EN 407 and 511 (heat and cold contact insulation) can be used for the testing. 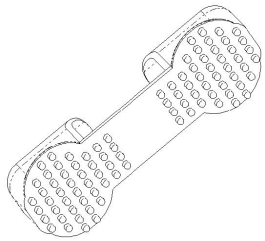	

	CO-ORDINATION OF NOTIFIED BODIES PPE **Vertical Group 5: Protective clothing and gloves** **RECOMMENDATION FOR USE**	**High visibility** **EN 471 – 1150 - 13356** **Rev.: 2007-08-24** Approval by: Horizontal Committee / Standing Committee Approved on: 19.11.2007 / 30.04.2009

This Recommendation for Use sheet contains the questions and answers, discussed and approved at VG5 meetings, on issues addressed in the following standards:

- **EN 471:2003 High-visibility warning clothing for professional use - Test methods and requirements**
- **EN 1150:1999 Protective clothing - Visibility clothing for non-professional use - Test methods and requirements**
- **EN 13356:2001 Visibility accessories for non-professional use - Test methods and requirements**

Standard and Clause	Key words	Question	Proposed solution	
EN 471, 1.	Multi-purpose high visibility garments (	Shall retroreflective material for high visibility garments used in welding operations or firefighting be tested to the provisions of EN 469 or 470-1?	Yes, they shall fulfil all relevant criteria of both EN 471 and EN 469 or 470 If this is not the case (e.g. because not all EN 471 requirements are met), then certification can still be done based on the Directive, but without any reference to EN 471. High-visibility materials shall not affect the heat protective performance of the garment, i.e. the criteria imposed by EN 469 shall be met, including flammability, tensile strength etc.. If these high-visibility materials are only applied as a strip on top of the garment, only flammability and heat shrinkage shall be considered	

4.1	Classification, combination of items	Is it possible to classify a trousers and jacket combination in class 3, when the separate items obtain only class 1 or 2?	Yes, it is possible. The fluorescent material of the part of the trousers, which is covered by the jacket in-service, shall be excluded when determining the performance class. It shall be stated in the instructions for use that they have to be worn together to obtain class 3.	
4.1	Classification, Jacket with removable sleeves	How to certify/classify a jacket with removable sleeves (class 3 with sleeves and class 2 without)?	The class indication in the marking could be replaced by an "i" referring to the instruction for use. An alternative is to mention the highest class in the marking, accompanied by a warning (in full text and in the language of the country of use) that this ranking can not be obtained if the garment is worn without sleeves. The choice is left to the manufacturer but everything has to be fully explained in the instructions for use, which are an integral part of the technical file.	
4.1	Classification, minimum area	What is the meaning of minimum areas of visible materials in m^2 of table 1 of EN 471? What shall be counted to determine the performance class?	Table 1 has to be interpreted as: the area (of materials <u>visible on both front and back</u> It means that only those parts of background material which <u>fully encircle</u> the torso etc. shall be counted for defining the area that determines the performance class. Otherwise said: Parts of fluorescent material not fully encircling shall not be counted. The exception to this rule is a tabbard. It means also that only the visible part shall be measured. The overlapping part must not be considered.	
4.1	Classification, use of smallest size	Is it necessary to ask for the smallest size of a range of clothing to certify high visibility clothing?	Yes, because the EN 471 classification system is based on material surface, i.e. clothing size, always the smallest size of a group of articles shall be checked. Notified Bodies and their customers have the freedom to determine if this "group" covers the full available range of sizes or if the smallest size(s) are considered as a group on its own, subject to separate certification.	
4.1	Classification, harnesses	Is table 1 of EN 471 fully applicable to harnesses?	Yes, table 1 is also applicable to harnesses. Figures B.8 and B.9 give some examples.	

4.1, 5.1	Classification, perforated materials	1. How shall the minimum required area (performance class) be determined in the case of perforated materials? 2. Shall the minimum luminance factor be applied also to perforated background materials?	1. EN 471 requires an area of 0.5 m^2 for the visible non-perforated background material class 2. Thus the visible area of the waistcoat should reach this class after deduction of the perforated area. 2. Size and distance of perforation influence the test results. The luminance factor shall be measured on the material as used (i.e samples with perforation). The requirements for the luminance factor (clause 5) shall be fulfilled.	
4.1	Classification - combined performance materials	Is it possible to certify all types of garments with combined performance material in class 1?	Combined materials can be used for all types of high visibility garments in class 1	
4.1, 6.1	Classification, markings on reflective trimmings	In several cases, the retroreflective strip has some markings or non retroreflective lettering on it. Is this acceptable?	It is possible to accept markings or non retroreflective lettering on the retroreflective strips, provided the minimum area and the same safety level are reached.	
4.2	Design, items not covered by the enumeration in EN 471	Can items, not literally listed in EN 471 be certified according to EN 471?	Yes, this is possible, as long as they meet the technical requirements. Examples: shorts, T-shirts with short sleeves, jackets with ¾ length sleeves, long-sleeved shirts without background material in the sleeves, trousers with background material not reaching to the bottom of the trousers-leg, A T-shirt can be seen as a waistcoat and can be certified without reflective bands on the sleeves	
4.2	Design, retroreflective bands, extra trimming	Can extra retroreflective bands be added if the design requirements are fulfilled without taking these bands into account?	Extra reflective trimming is allowed if the requirements of EN 471 are fulfilled without them. These "extra" bands could e.g. contain discontinuities or be not fully encircling. However they should not be included in the calculation to determine the performance class.	

4.2	Design, reflective bands, arrangement	Can retroflective bands be arranged in another way than described in EN 471, in order to make them more visible in a given end-use, e.g. retroreflective bands positioned on the legs when there is a risk the bands are hidden by fixed or moving items present in the work situation? Can these items still be considered as complying with EN 471 (cfr. marking), if accompanied by a reference to the deviation and the reasons for it?	In case of deviation from a harmonized standard to suit a particular end-use, it should be proven from the risk analysis of that particular application that the proposed modification is justified, i.e. the PPE still meets the basic health and safety requirements of the Directive. No. Compliance with an EN standard means to comply with the whole standard.	
4.2	Design, reflective bands, patterns	Is it possible to introduce different patterns of retroreflective striping as variants as long as the specification (classification and performance requirements) is met? Same rationale for various background colours?	It is possible to accept these variants if they are clearly explained in the technical documentation and if all possibilities are included in the test report Idem.	
4.2	Design, background material, minimum area (legs)	For a coverall with fluorescent background material and non-fluorescent material, what minimum area of fluorescent background material should be located on the legs?	It is difficult to impose criteria for the distribution of the fluorescent background material on a coverall, apart from the general criteria specified in EN 471(minimum surface, distribution front/back). Actually such criteria would depend on the typical intended use of the garment. If this is not clear, we suggest to use the criteria of the harmonised standard.	
4.2.2	Reflective bands, width and homogeneity	The manufacturer, who made the request, produces several types of retro-reflective trimmings. Due to the production technology used, the reflective elements need to be protected by a transparant plastic sheet. This plastic sheet is attached to the support material of the reflective layer by a pattern of welded lines. At these lines the reflectance is less than in the rest of the material. Does this comply with the requirements of EN 471:2003, where homogeneous reflectance of materials is not mentioned as such?	EN 471:2003 is a harmonized standard, which confers presumption of conformity. The requirements specified in EN 471:2003 shall be met. To ensure the visibility of a person from a distance at night-time strips shall have a minimum width of 50 mm and the material shall meet the minimum reflection requirements of EN 471, measured in accordance with the method specified in that standard. These normative provisions supersede the VG 5 sheet of 1998 and the compiled RfU sheet shall be modified accordingly.	

		EN 471:2003 states that: - retro-reflective bands shall have a width of at least 50 mm (4.2.2). - the retro-reflection measured under different angles shall reach the values specified in tables 5 to 7 (6.1). - the measurement itself shall be carried out in accordance with CIE 54.2 on a specimen of 10 cm x 10 cm (7.3). Previously (a RfU sheet from 1998) VG 5 has taken the following position *Question: There is a 50 mm wide retroreflective band including a border of plastic material at each side. These borders don't meet the minimum reflection required by EN 471, although the average coefficient of reflection for the whole band is within the range required. Is this type of material acceptable for certification?* *Answer: No. The strip shall show sufficient retroreflection over a width of at least 50 mm.* The producer of the reflective material objects that this interpretation is not in line with the provisions of EN 471:2003, in particular the measuring procedure, and hence should be revised or withdrawn.	<u>Additional information</u>: *It became clear from the discussion that this is a complex issue.* *For some materials, e.g. the case of two layers bound together with a regular pattern of thin welded lines, the less reflecting surface represents only a relatively small part of the total reflective area and even contributes to the durability of the reflective properties. Here the interpretation of the standard in the sense described above seems acceptable.* *However this is less clear for other structures. In some products, although they are 50 mm wide and meet the overall reflectance requirements, the less reflective part is much larger (more than 30% of the total area) and here it is questionnable whether the above interpretation of the standard is adequate to demonstrate compliance with the basic requirements of the directive or if it rather leads to confusion and misuse of the normative provisions.* *This situation will also lead to an unstable situation where notified bodies will come to contradicting conclusions. We will request CEN/TC 162 WG 7 to address this issue as soon as possible and to consider all types of products present in the market.*	
4.2.3	Bands encircling the torso	EN 471:2003, clause 4.2.3 a) states that coveralls shall have retroreflective bands "encircling the torso". According to the dictionary a torso is the trunk of the human body, without head or limbs. There is no problem to verify this requirement if the bands are put low enough (under the armpit) to encircle the torso fully. But what if the upper band is placed almost at shoulder	VG 5 confirms the solution given in sheet 05.348 (2002). The band shall be put low enough to encircle the torso. Other configurations may be used if justified by specific work situations and on the condition that the reflective trimming remains sufficiently visible in all work postures.	

		height and hence can not encircle the torso fully? *Note: This question has been raised before (sheet 05.348-2002.04-05), but the sheet was removed from the new compilation, because NBs assumed the text of EN 471:2003 was clear enough.*		
5.1	Luminance factor, washing	Is it possible to accept a garment with a reduced luminance factor (below the performance requirement) after "x" washing cycles?	No, the luminance factor (and the chromatic coordinates) shall still meet the requirements after "x" washing cycles, if the manufacturer's instructions indicate that performance is retained for at least this number of cycles. This also applies to commercial laundering, if claimed by the manufacturer's instructions	
5.1	Colour test, orientation	If the colour test results depend significantly on the direction of the measurement, which value shall be given as test result?	At least four measurements shall be carried out in four perpendicular directions and the mean value shall be given as test result.	
5.1., 6.1	Background fabric, logos	A manufacturer has printed a repeating logo on a background fabric. The logo has retroreflective properties, which do not comply with EN 471. This logo comes in addition to the required areas of retroreflective material and just improves night-time conspicousness. Is this repeating logo allowable?	Yes, it is actually an example of "extra" trimming (see above sub 4.2 - design, retroreflective bands, extra trimming)	
5.3	Colour fastness	For which kind of non-fluorescent materials are the colour fastness / staining requirements in clause 5.3 applicable?	The colour fastness / staining requirements in clause 5.3 are applicable for the non-fluorescent material layers; e.g. additional (contrast) material layers on the outside of a garment or lining(s) inside the garment. Also non-fluorescent material **layers** are mentioned in the revísed title of clause 5.3 in EN 471/ prA1 (instead of (all kinds of) non-fluorescent material). The colourfastness / staining requirements in clause 5.3 are therefore not applicable for the non-fluorescent materials which aren`t (garment) layers: e.g. embroideries, textile material of zipper, elastic strips,	

			small marking tags, sewing threads etc. Small areas of non-fluorescent materials (e.g. < 2% of fluorescent material area) as labels, (knitted) stretch bands for jackets or trousers, fashion stripes (e.g. 3 mm chest braid), pocket flaps etc need special consideration (e.g. large area? dark colour? industrial washing? etc) and may require testing . Washing of the whole garment can be used as a screening test to assess the influence of these small area materials. For other materials the colour fastness shall be assessed. Clarification in the next revision of EN 471 is requested .	
5.3.3	Marking, bleaching	Is it necessary to perform a colour fastness test to bleaching with hypochlorite on a material (according EN 471 :2003 p. 5. 3 . 3), if in the care label of the garment bleaching is not indicated and/or allowed?	If the care labelling excludes certain care treatments, the corresponding tests should not be performed	
5.6.3	Background material, wvp-index	The water vapour resistance of textile background materials shall not exceed 5 (m^2 Pa/W) and the water vapour permeability index (imt) shall be not lower than 0.15 (EN 471, clause 5.6.3). When testing water vapour resistance (EN 31092) and water vapour permeability index for eight woven PES/CO fabrics (from 160 to 295 g/m^2) all materials passed the requirement for water vapour resistance, but only two of them passed the requirement for water vapour permeability index.	The requirement is not applicable to this kind of thin materials, but only to thicker materials for which the requirement of water vapour resistance cannot be applied. The combination of WVP resistance and WVP index leads to the exclusion of materials on the basis of their mass per unit area, which is not relevant for their comfort properties. The WVP index should therefore not be required for non-coated woven or knitted fabrics which have a sufficiently low WVP resistance.	
6.2	Washing, maximum number of cycles	Nowadays in the market there are reflective bands that only last three washes. Is it possible to certify high visibility clothing under the Directive 89/686/CEE, and to EN 471 and EN 340 standards, if the care labelling shows that the maximum number of washes is only three?	Yes, this is possible, but the accompanying information (leaflet, marking) should be very explicit and unambiguous about this.	

8	Marking – number of washing cycles	EN 471:2003 refers completely to EN 340 for "marking" requirements. EN340 mentions that the number of washing cycles shall be mentioned on the label if required by the specific standard. Washability is one the main requirements of high-visibility clothing, since washing is one of the main reasons for garments losing their fluorescent and retroreflective properties. Does this mean that the label of EN 471 shall mention, close to the wash symbol, the maximum number of washing cycles (as it has always been the case), or not?	The maximum number of washing cycles shall be mentioned	
8	Marking combined performance	EN 471 allows the use of combined performance material for Class 1 garments. These materials are classified according to Table 7, and do not meet Table 5 (Level 2) or Table 6 (Level 1). How should such garments be marked? The intended marking of 'Y' for retroreflective performance is either (Level) 1 or (Level) 2.	Use an X and put 'Combined performance material' below the pictogram or explain in the instructions for use.	
EN 13356	High visibility accessories	(Attached were some pictures of accessories, per type as defined in EN 13356.) Type 1: **Free hanging accessories**: dangle-tags, for children's clothing (on the side pockets, on the sleeves, on the zipper.) used in a lot in Scandinavian countries. (see picture 1) Type 2: **Removable accessories** The classical product is the slap-wrap. It can be applied on ankles or on wrists for cycling or jogging. (see picture 2) Type 3: **Mounted accessories** These are all the applications manufactured to be permanently fixed. (see picture 3)	All three types are considered to be PPE, category II	

		Are these items PPE in the sense of Directive 89/686/EEC?  Picture 1  Picture 2  Picture 3		
EN 13356	High visibility accessories, cape for horse riders	Is it possible to certify <u>the reflective striping</u> on a cape for horsemen (grey colour) according to EN 13356 ? The width of reflective stripes is less than 5 cm . The information leaflet clearly declares that it isn't a warning vest and for use by horsemen only. The standard EN 13356 is fixed at the label. The material of the cape doesn’t comply with eihter EN 471 or EN 1150. 	The argument given in favour of certification of this product was that it was only an accessory (EN 13356), comparable to a reflective sticker or hang tag. The cape is then merely a piece of normal clothing, to which the reflective stripes are attached. However, most notified bodies did not follow this argument and were of the opinion that such type of garment gives the user a false sense of safety, even if the information for use explains that only the striping and not the vest should be considered as a PPE.	

EN 13356	High visibility accessories, minimum area	What is the meaning of the term "minimum area" in the text underneath table 2 of EN 13356. Does is mean the reflective area of the test specimen or does it refer to the area of 15 cm² which type 2 & 3 accessories should exceed (see clause 4.1). If "minimum area" does refer to 15 cm² then surely the requirements in table 2 are meaningless. A type 2 or 3 reflector needs to meet R' values at specific entrance and observation angles. However if a reflector only just meets these levels then it will not meet the minimum R value of 400 mcd/lx. We have a reflector which meets table 2 but fails to meet this 400 mcd/lx value.	Both requirements shall be met. The 15 cm² are necessary for the visibility from a distance. On the other hand the material shall also meet the 400 mcd/lux requirement.	

	CO-ORDINATION OF NOTIFIED BODIES PPE **Vertical Group 5: Protective clothing and gloves** **RECOMMENDATION FOR USE**	**CHEMICAL** **(includes biological and radio-active risks)** **Rev.: 2007-02-07**

Approval by:	Approved on:
Horizontal Committee	19.11.2007
Standing Committee	30.04.2009

This Recommendation for Use sheet contains questions and answers discussed and approved at VG 5 meetings on issues addressed by the following standards:

- **EN 1073-2:2002 Protective clothing against radioactive contamination - Part 2: Requirements and test methods for non-ventilated protective clothing against particulate radioactive contamination**
- **EN 13034: 2005 Protective clothing against liquid chemicals - Performance requirements for chemical protective clothing offering limited protective performance against liquid chemicals (Type 6 and Type PB [6] equipment)**
- **EN ISO 13982-1:2004 Protective clothing for use against solid particulates - Part 1: Performance requirements for chemical protective clothing providing protection to the full body against airborne solid particulates (type 5 clothing) (ISO 13982-1:2004)**
- **EN 14126:2003 Protective clothing - Performance requirements and tests methods for protective clothing against infective agents**
- **EN 368: 1992 Protective clothing – Protection against liquid chemicals – Test method: resistance of materials to penetration by liquids**
- **EN 369:1993 Protective clothing – Protection against liquid chemicals – Test method: resistance of materials to permeation by liquids**
- **EN 463:1994 Protective clothing - Protection against liquid chemicals - Test method: Determination of resistance to penetration by a jet of liquid (Jet Test)**
- **EN 466:1995 Protective clothing – Protection against liquid chemicals – Performance requirements for chemical protective clothing with liquid-tight connections between different parts of the clothing (type 3 equipment)**
- **EN 467:1995 Protective clothing – Protection against liquid chemicals – Performance requirements for garments providing protection to parts of the body**
- **EN 468:1994 Protective clothing - Protection against liquid chemicals - Test method: Determination of resistance to penetration by spray (Spray Test)**

Standard and clause	Key words	Question	Proposed solution	Comment
1073-2, 4.2	Radioactive contamination – puncture resistance	Can a material, which obtains a **level 1** for puncture resistance (EN 863), be used for non-ventilated protective clothing against particulate radioactive contamination (EN 1073-2)?	The requirements, as specified in EN 1073-2, are somewhat ambiguous. The introductory sentence to clause 4 states that at least level 1 shall be reached, whereas Table 1 (clause 4.2) specifies level 2 as a minimum. Guidance should be taken from this table. Hence materials that obtain only level 1 can not be used for this type of protective clothing.	
13034	Additional features	Can embroideries be put on a garment?	The embroidered garment shall pass the low level spray test	
13034, 4.1	Repellency, penetration	EN 13034:2005 Clause 4.1 states that chemical protective clothing materials shall be tested and classified to Clauses 4.12 and 4.13 of EN 14325:2004. Clause 4.12 and 4.13 of EN 14325:2004 state that the material shall be tested against all four chemicals listed in Table 9. Clause 7g of EN 13034 states that the User Information must give the performance levels for all of the chemicals tested. Should the material be tested against the four chemicals listed in EN 14325 Table 9, and should the User Information list the results against these four chemicals?	In order to be conform with EN 13034:2005, chemical protective clothing materials must be tested to Clause 4.12 and 4.13 of EN 14325:2004 using all four chemicals listed in Table 9. The User Information must list the levels obtained for all four chemicals listed in Table 9, even if unclassified, plus any other chemicals the manufacturer has tested against.	
13034, 4.2	Chemical penetration, seams etc.	EN 13034:2005 Clause 4.2 states that seams for chemical protective clothing materials shall prevent penetration of liquid. For type 6 suits, the standard specifies that the whole suit spray test (according clause 5.2) should be performed, but is it enough to evaluate the resistance to liquid penetration of	Garments covering the whole body (coverall, jackets and trousers) shall be subjected to a whole suit spray test to assess the (limited) spray tightness of the garment construction. This is not applicable to partial body protection items.	

		seams? A specific method to test the resistance to liquid penetration of seams for all kind of type 6 items (Type 6 suits or type PB 6) is not specified in EN 13034:2005. Should the seams be tested against the four chemicals listed in EN 14325 Table 9?		
13034, 468	Low Level Spray Test	There is not enough information about the calibration. We use different, nozzles and a different surface tension as in EN 468. Which volume should be in the beakers after the calibration?	Proposal to collect data results from different test laboratories (see annex for form)	EN 468 rev will describe both types of spray tests in detail
13982-1, 6e	instructions for use; test results	Should a manufacturer be allowed to indicate in the instructions for use the real values of test results obtained in EC type examination testing, when the requirement of these tests is expressed as a pass/fail criterion only?	No, according to sheet nr CNB/P/00.077, which is an explanation of the directive - annex II – item 1.4, the instructions for use must not be misleading for the user. Mentioning a measured value in addition to the conformity statement could make the user suppose that this value can be used to express the real performance of the equipment, and to determine the choice of the most suitable equipment and its conditions of use (for example wear period) taking into account the risk analysis. This is not acceptable since the standardisation working group - after evaluation of the test method - only retained a pass/fail criteria instead of classes.	
14126, 4.1.4	Infective agents	1.) For chemical protective clothing, which meets the requirements of. EN 943-1, protection against infective agents is claimed. Shall this clothing meet all requirements (tests), specified in EN 14126, clause 4.1.4, or just part of them? 2.) Is it necessary to perform the same material tests on clothing materials, gloves and boots?	1.) The intended use and the corresponding risks and levels of protection shall clearly be stated. From this it should become clear if all or just some of the requirements are relevant and which tests should be performed. It should be noted that EN 14126 was developped with a very wide range of clothing types in mind. 2.) Yes, all constituent materials, exposed to the risk, shall be tested	

368, 1	Certification, use of EN 368	Is it possible to certify) a PPE (CE type examination) by combining EN 340 and EN 368, without use of a specific harmonized product standard?	No, a combination of EN 340 and EN 368 is not sufficient. There are other essential requirements to be met also. The relevant product standard will probably be prEN 13034 (final draft)	
368, 5.5	Volatile liquids penetration	The run off and penetration parameters are determined by means of the weight of fabrics and filter paper. How can such a procedure be carried out with volatile products (e.g. white spirit)?	The results of tests with volatile liquids may not be reproducible unless validated procedures are followed to control losses by evaporation to a constant definable level. The measurements of penetration, absorption and repellency may be facilitated conveniently however by the solution of an analysable substance (e.g. fluorescent or visible dye tracers) in the volatile liquid, provided it does not influence the performance of the test specimen (i.e. its resistance to penetration and repellency).(text from prEN ISO 6530:2004 – final draft)	To be withdrawn when EN ISO 6530 is approved.
369, 5.2	permeation, collecting medium	According to EN 369 (and EN ISO 6529) the collecting medium shall be: *"Water or any other liquid having no influence on material permeation resistance".* This may be very difficult since the liquid collecting medium shall comply with 3 requirements: - to dissolve the test chemical; - to be inert with regard to the material to be tested, and not modify its permeation properties. - to allow the chemical product to be detected with the sensitivity mentioned in paragraph 6.6 ($1 \mu g.cm^{-2}.mm^{-1}$) Combination of the three requirements will sometimes be impossible, e.g. extraction of plasticizers from PVC gloves or detection problems with a paraffine type mineral oil	It is necessary to verify before testing that the collecting medium has no influence on the tested material and the blank shall be zero. Suggestion: a guide to collecting medium selection should be produced	EN 369 superseded by EN ISO 6529

463, 5	Test liquid	Is it necessary to use de-mineralised water at 20 ± 2 ºC to prepare the liquid for application in the jet test?	Use of fresh tap water at ambient temperature is adequate as long as specifications for the detection characteristics are met. Reason : - No unnecessary use of expensive de-mineralised water - Harmonisation with EN 468 (spray test)	The preparation of the test liquid will be explicitly described in the revision of EN 463. De-mineralised water will not be required.
463, 8.2	Test points	It is stated in 8.2 that the jet nozzle shall be positioned 1 m from the test spot at an angle that is more likely to cause penetration by the liquid jet. We think that this angle should be more clearly specified because it has a great influence in the test result and can make a suit pass or fail.	The angle shall be such that it makes the penetration of the liquid jet easier. A "worst case" scenario should be followed (see annex)	This will be explicitly included in the revision of EN 463, e.g.: "*The jet nozzle shall be positioned in a horizontal line and at an angle which is most likely to cause penetration by the liquid jet. If a test spot is e.g. located in a zip covered by a flap, the jet shall come from the side that gives it possibility to come under the flap."*
466, 6.3	jet test	Are two-piece suits, for example jacket and trousers, able to pass the jet test? Can the suit meet the requirements of EN 466 if the suit protects only parts of the body, for instance a garment without protection of the head? What design shall a garment have according to EN 466?	Experience shows a two-piece garment can pass the jet-test. Partial body protection is not within the scope of EN 466. A suit without head, hand and foot protection is considered full body protection.	EN 466 will soon be superseded by EN 14605. The scope of this revised standard includes Type 3 and Type 4 clothing and partial body protection. It describes various types of garments that can meet the Type 3 or 4 requirements. Head, hand and foot protection is not necessarily included. Two-piece suits are explicitly mentionned
467	Partial body protection	Is it correct to certify a suit (combination of jacket, trouser, shirt) as full body protection and as well as partial body protection if there are no explicit design requirements in the relevant standard or partial body protection is not mentioned?	Yes, this is possible	EN 467 to be superseded by prEN 14605 (final draft)

general	Abrasion, flex cracking, breakthrough	It is not specified, whether Method 1 or 2 of EN 530 shall be taken. What is the definition of breakthrough? In several standards the breakthrough detection for abrasion or flex cracking test is required but no clear end point criteria are specified.	Method 2 shall be used. Breakthrough shall be determined by use of the pressure pot method. If this is not possible, a hole of 1 mm diameter shall be considered as breakthrough for abrasion. For flex cracking, the hole is considered to be a crack of 1-mm length through the complete coating.	
General	Abrasion, flex cracking, pressure pot	When testing coated fabrics, laminates and membranes to Clauses 4.4, 4.5 and 4.6 of EN 14325:2004, there can be significant differences in classification between visual assessment and when using the pressure pot. Many fabrics that have previously passed using visual inspection have failed when assessed with the pressure pot. *Now that EN 13034, EN ISO 13982-1 and EN 14605 have been ratified, what should be done regarding Certificates that have been issued where the fabric was assessed visually?*	The notified bodies shall draw the manufacturers' attention to the changes induced by EN 14325 and their impact on material classification and recommend the manufacturers to have their materials assessed against the new test procedures. However, this should not be presented as mandatory.	
general	attached gloves and boots	There are no requirements to test gloves, boots, etc attached to a chemical suits for resistance to permeation against the same chemicals as the main part of the suit.	Glove materials shall be tested to either EN 374-3 or EN 369 using the same battery of chemicals the main part of the suit has been tested against. There is no permeation standard for boots. The notified body shall conduct all necessary tests to establish the conformity for the same battery of chemicals. The user information should include test data for the individual components of the clothing assembly.	
general	Cleaning, preconditioning for testing	How should chemical protective suits e.g. prEN 943-1 type 1, be cleaned, if they can not be cleaned according to a standard (ISO 6330...) but according to specific instructions for use? The interpretation of the description in the instruction for use can be very different in the different test laboratories.	The instruction for use should be followed. They should be clear and unambiguous. If this is not the case, the notified body should ask the manufacturer to provide the necessary clarifications. *NOTE This is applicable to all types of garments*	.

general	cold protection combined with chemical protection	What are the requirements, test methods, and categorisation of a cold protective suit worn over a chemical protective suit? It is used to protect the user of a chemical protective suit against cold of gases liquefied under pressure to – 60ºC, and to protect also the devices against these “cold” chemicals.	General requirements of the directive (design principles, innocuousness of PPE and comfort and efficiency) shall be checked. This includes testing of strength, puncture, tear, seam strength, flex cracking at low temperature and resistance to ignition. Requirements of EN 943-2 shall be used for evaluating the level of performance. The whole suit when used with the chemical protective clothing and devices shall pass the work simulation test at low temperatures as specified in EN 943-2, clause 8.1.1.2. The chemical protective suit itself shall fulfil the permeation requirements This is category III equipment.	See also EN 342
general	instructions for use	Should NB´s agree on essential harmonised formulations, which are not covered/required by the (pr)EN-standards, to be included into the “instructions for use” for specific types of CPC?	Yes, they should. This is an approach to improve equal treatment of the manufacturers by the European test houses. *1.* <u>CPC Types 1, 2, 3, 4, 6</u> *“This clothing gives protection against specific named chemicals.”* *“The test results found under laboratory conditions are only to be regarded as an orientation for practical applications.”* <u>CPC Types 3,4,6 that are used in connection with respiratory protective devices (RPD)</u> *“No general statements can be given for the leak tightness of RPD in connection with the approved suit different from those used under test.”*	
general	limited protection	In categorisation of PPE for protective clothing and gloves the definition is: "PPE providing only limited protection against chemical attack". What is meant by chemical attack?	The moment the chemical reaches the skin, i.e. the first contact with the skin. Since there is no perfect and lasting barrier, all chemical protective clothing and gloves should fall into this category.	EN 369 superseded by EN ISO 6529

general	pockets	Are open pockets (without pocket flap) especially rule pockets, allowed for this kind of protective clothing?	Open pockets should not be used. All pockets, including pockets with a vertical opening, shall be covered to prevent penetration of liquids	
General	repellency	Several manufacturers include in their instructions for use the procedure to be followed for reapplication of the fluor carbon finish. Does the NB need to verify these instructions?	No, the NB only needs to verify that the manufacturer gives the instruction.	
general	Test methods	The level of performance of CPC material when tested for abrasion and flex cracking resistance is determined through a leak tightness test. The apparatus for this purpose is a pot test which dimensions are specified in the standards. The abraded area of the sample after testing is larger than the one of the pressure pot test for examination. Similar problem happens with the area submitted to flexing test. That means that the test does not cover the examination of the whole area susceptible to be damaged.	The test specimen shall be placed with the damaged area on the centre of the pot. Dimensions of the pot test should be changed in order to examine the whole damaged area.	

Annex to "low level spray test"

NOZZLES	Pressure (bar)	Flow (l/min)	BEAKERS	Volume (ml) collected per beaker. (after 3 min spraying)
1 (bottom) 2 3 4 (top)			1 2 3 4	
Surface tension of the test liquid (N/m): Pressure at the pump (if not possible measurement at each nozzle):				

	CO-ORDINATION OF NOTIFIED BODIES PPE **Vertical Group 5: Protective clothing and gloves** **RECOMMENDATION FOR USE**	**GENERAL** **Rev.: 2007-08-24**	
		Approval by: Horizontal Committee Standing Committee	Approved on: 19.11.2007 30.04.2009

Standard and Clause	Key words	Question	Proposed solution	Comment
EN 530	Abrasion testing	The testing procedure for method 1: "Determination of abrasion resistance", needs better description. It is not clear whether or not foam shall be positioned between the metal insert and test specimen. The use of foam or felt backing for the abradant is also not properly described. This question was raised at the VG5 meeting in 2006 but was not resolved. Subsequent to this meeting, CEN/TC162 WG5, which is responsible for EN 530, met and discussed this question. The WG agreed to seek a preliminary work item for the amendment. They also agreed that the correct procedure for mounting of the test specimen and abradant, which is missing from EN 530:1994, is in EN ISO 12947-2:1998.	*It may take some years to amend/revise EN 530 because of various other concerns. Therefore a VG 5 RfU sheet is needed for use during this unknown interim period* When testing using EN 530 Method 1, undertake the procedures set out in Clause 7.6.2 "Mounting of the test specimen" and Clause 7.6.3 "Mounting of the abradant" of EN ISO 12947-2: 1998. The text of 7.6.2 says that "for test specimens having a mass per unit area less than 500 $g.m^{-2}$ place the foam backing on the test specimen".	
EN ISO 14877	Abrasive blasting, categorization of PPE	To which category of PPE (according to directive 89/686/EEC) do abrasive blasting clothing of type 1(no respiratory protection) , type 2 (upper part of the body) and type 3 (whole body protection, including respiratory protection) belong?	Type 1 is PPE of category II (independent of respiratory protection devices). Types 2 and 3 are category III , because they are used in combination with respiratory protection devices.	

EN 340	Combination of clothing items	A manufacturer produces a vest, sleeves that can be attached to the vest or used separately, apron and gaiters for welders, all made of the same material. Can he submit one technical file containing designs, etc for all of them? In such a case, can each garment, separately bear the CE marking?	It is possible to submit one technical file only for all products. This depends on the intended use. If the manufacturer points out in the information leaflet that they must always be used together, then one certification shall be carried out. If not, several separate certifications are possible.	
EN 340	Comfort, practical performance testing	What is the minimum requirement to meet clauses 1.2.1.2 and 1.2.1.3 of the Basic Health and Safety Requirements?	When there is no specific assessment procedure in the relevant product standard, Annex C of EN 340:2003 or a similar assessment shall be used.	
EN 14058	Cool environments	EN 342 covers category II and III PPE, but it's not very clear if scope of EN 14058 addresses category I or II. Some garments don't meet the requirements of EN 342 (thermal insulation with manikin ≥ 0.31 m^2K/W), nor these of EN 14058 (thermal resistance Rct <0.25 m^2K/W). How can they be certified and classified? Or if we test the thermal insulation of fabrics according EN 31092 and we don't have the jacket to test on the thermal manikin. Is it possible to classify them according EN 14058 if the thermal insulation is higher that 0.25 m^2K/W?	EN 14058 was developed for protection in cool environments (higher than -5 °C), which corresponds to cat. I PPE. However, it contains also an optional manikin test. Depending on the results of the manikin test the garment can be cat I or cat II (see tables in annex B). Results should be interpreted in connection with the rest of the standard clothing used in the test. This case is not yet foreseen in either EN 342 or EN 14058. Certification according to the directive is possible. Should be taken up at the revision of the standards. A possible alternative is ISO 9920 (to be checked)	
EN 340	Dimensional Change	Is dimensional change in clothing only related to length and width or to seams too?	At the moment only shrinkage of materials shall be tested.	
EN 340	Dimensional change, knitted materials	Knitted garments often have a shrinkage higher than 3 percent. Can these garments be certified given the real shrinkage is indicated in the information leaflet?	Dimensional changes in knitwear should be considered against the fitness for use (and the protective properties) of the item. EN 471 and prEN ISO/FDIS 11612 allow for a maximum shrinkage of 5% for knitted materials. If shrinkage exceeds 5 % the manufacturer shall provide relevant information and advice in the informative notice and labelling (taken from ISO/FDIS 11612:2004).	

based on CLC/TS 50354	Electric arc	This standard does not specify whether the test has to be carried out on a garment or on a fabric. On what should we base our choice on? The requirement depends on the material tested: In the garment test, the requirements take the behaviour of the accessories and fasteners into account (after exposure, they shall be functional) but the heat flux is not to be measured, however, in the material test (obviously) the accessories are not evaluated but the heat flux does. Which method must be carried out in order to certify an PPE against thermal hazards of an electrical arc? Which requirements are the most important in order to evaluate the protective clothing? In order to evaluate the behaviour of the accessories (and/or other materials) against the exposition of an electrical arc, it is (maybe) not enough to consider the results obtained on fabric.	The CLC/TS has been superseded by IEC 61482-1-2 since January 2007. This standard is a test method which contains provisions which can be evaluated easily and make it possible to assess the protective properties of the whole garment. Another standard IEC 61482-2 which contains product requirements is in preparation. Both fabric and garment shall be tested and evaluated. Note: an other test method is described in IEC 61482-1-2.	
EN 13911	Fire hoods, practical performance test	The paragraph 6.2 refers to annex B (a normative annex). This annex describes a practical performance test which shall be conducted with a fire-fighter equipment: firehood, clothing, breathing apparatus, helmet, and gloves. As this test is depending on the type of each equipment used and as it is the responsibility of the fire-fighter to associate the correct equipment depending a risk assessment (and not the notified body): Is it possible for a notified body to issue an EC type examination based on EN 13911 **without carrying out the practical performance test** defined in annex B but with a warning which explains that **the fire fighter shall conduct the test before selecting a firehood** ?	No, as the annex B is normative, no EC type examination based on EN 13911 should be issued without carrying out the practical performance test. Compatibility of the hood with other PPE items shall be checked. It is the responsibility of the manufacturer to propose a set of PPE to be used with the hood. This set can later be extended.	

all clothing standards	Identification of materials	In test reports materials are often only referred to by a single, often commercial, reference name. In reality however this name can cover a variety of materials different by structure and weight (e.g. for fabrics) or by origin and thickness (e.g. for leather). Is it possible to have a uniform and clear "finger print designation" of materials in test reports in order to make an evaluation easier? To this purpose we propose to use the elements given above. Ex.: .aramid twill 2/1 - 270 g/m^2 .cow split 1.3 - 1.5 mm	A unique ref. number or name should be enough to identify the material.	
Innocuousness, plastic clothing (EN 340)		EN 340 (2003) mentions in section 4.2 that "Information claiming that the product is innocuous shall be checked". For materials such as plastics, this can lead to great difficulties to get precise information, because suppliers won't give accurate information enough to have the exact name of the constituents. In this case, how can we check innocuousness of such equipments and what do we have to do for an EC type examination? A specific problem deals with the case of ventilated or non-ventilated suits made of PVC where phthalates are included as plasticisers. The possible exposures are both by contact with the skin and by inhalation. Then, how can we assess the impact of such products on the health of the wearer?	RfU sheet 117 dd. 2003.08.22 of the HC describes the obligations of the manufacturer with regard to information on noxious substances present in the PPE. A group of noxious products is explicitly mentionned in EN 340, clause 4.2., a) to e). Their absence in the material should be proven. For further guidance, see also EU Directive 76/679 (and subsequent amendments) on the marketing and use of certain dangerous substances and preparations.	
EN 340	Innocuous-ness, azo colourants	EN 340: 2003 clause 4.2 Innocuousness, paragraph (e), states that Azo colourants, which release carcinogenic amines listed in EN14362-1, shall not be detected by the method in that standard. EN14362 – 1 is the method for the	EN14362-2 should be used for synthetic fibres and CEN ISO/TS 17234: 2003 used for dyed leathers For information: ▪ EN 14362-1 Textiles - Methods for the determination of certain aromatic amines derived from azo colorants - Part 1:	

		determination of amines in natural fibres. This method is not suitable for synthetic fibres or for leathers.	Detection of the use of certain azo colorants accessible without extraction ▪ EN 14362-2 Textiles - Methods for determination of certain aromatic amines derived from azo colorants - Part 2: Detection of the use of certain azo colorants accessible by extracting the fibres CEN ISO/TS 17234:2003 Leather -- Chemical tests -- Determination of certain azo colourants in dyed leathers	
EN 340	Marking, reference to general standards	Is it possible to use EN 340 (EN 420) alone, when no EN product standard is applicable and to put the EN 340 number on the marking?	Marking with the general standards EN 340 or EN 420 is not possible. If there is no product standard, then no normative reference should appear on the marking.	
EN 533	Marking, compliance with several standards	How can the marking be made when only a part of garment complies with a standard? *Example*: The whole garment passes EN 533 level 3 and the requirements for CPC Type 6, but only the front of the garment can be categorized in class D3 for aluminium splashes. Can D3 be put on the marking?	It is possible to mark with the number of the standard, if in the information of use is clearly explained which part of the body is protected.	
no standard	Paint booth clothing	Which requirements should be met by clothing worn in such an environment? Which standard(s) can be used to assess?	Refer directly to the Directive, as there is no appropriate standard	
EN 340-420)	Protective clothing and gloves, pictogram ionising radation	EN 420 (2003) foresees a pictogram for protective gloves against ionising radiation whereas EN 340 (2003) doesn't foresee any pictogram against this risk. How do we have to proceed for protective clothing providing protection against ionising radiations?	Use for protective clothing against ionising radiations the same pictogram as for gloves. The meaning of the pictogram shall be explained in the information for use.	
EN 343	Reference to standards	Can a garment label refer to e.g. EN 343 when the material does not fulfil the requirement for bursting strength?	One can only refer to a standard when all criteria of this standard are met. The pictogram is not protected and can be used	

in the absence of a standard	Test report, reference to directive	Is it allowed to mention in a test report that the tested fabric (not a garment) conforms to the safety requirements of directive 89/686?	No, the Directive addresses PPE, i.e. finished products, not materials	
several standards	Various performance levels in one garment	How can a garment be marked with different levels of performance in front and back (e.g. aluminised material in the front, and non-aluminised material in the back)?	As a general principle the "worst case" approach shall be used, i.e. the lowest level shall be announced in the marking. This shall also be done in the information leaflet, but the attention may be drawn to the higher protection levels offered by some parts of the garment, in particular if they are exposed to higher degrees of risk. The higher performance level may however be announced in the marking and in the information leaflet if no mistake on behalf of the user is possible and if the product standard does not contain specific and conflicting provisions. Examples: 1. IEC 61331-3 on X-ray protective aprons specifies that the protection levels in front and back may be different, but that both levels shall be indicated in the marking 2. EN 531 does not contain such provisions and e.g. in the case of someone working in front of an oven and wearing a long coat with an aluminized front and an open back for comfort, the protection level of the front should be announced. The "flame" pictogram on the garment should then be accompanied by the "i" pictogram to draw more attention to the information leaflet.	
EN 343	Water penetration – rainwear	EN 343: 2003 states that for water penetration after cleaning (dry-cleaning and/or washing clause 5.1.3.2) the material needs to be washed 5 times prior to testing. However, if the manufacturer is claiming that the garment has a maximum number of washes / cleaning cycles should we still only clean it 5 times (as per the standard) OR should we test it for water penetration after it has been exposed to the maximum number of cleaning cycles that have been claimed by the manufacturer.	Water penetration testing shall be performed after 5 cleaning cycles, as stated in EN 343. If the manufacturer claims a number of cleaning cycles superior to 5, he shall demonstrate his claim is correct.	

all clothing standards	Water vapour resistance	Annex II,2.2 of Directive 89/686/CEE states that the PPE enclosing parts of the body, shall limit perspiration resulting from use. Is it necessary to test all kinds of clothing for water vapour resistance?	No, several other techniques (design, cooling garments, ventilation) can be used to meet that requirement	
ISO 15394	Wildland firefighting clothing	Does wildland firefighting clothing certified according to the current ISO project 15394 (for example coverall made of Nomex® III 185 g/sqm) belong to Category II or III	It's not the responsibility of the Notified Body to categorize the PPE . It is generally accepted that wildland firefighting clothing belongs to Category III	
	Working garments (not protective)	Are classical working garments considered as protective clothing?	A classical working garment which protects only against non-aggressive dust without any specific protection is not considered as protective clothing and is excluded from the scope of the PPE directive For a PPE intended use and the corresponding risks shall be described by the manufacturer. Sanctioning improper use is the responsibility of the market surveillance.	

Vertical Recommendation for Use sheets (RfUs)
of Vertical Group 7 "Protective Clothing against Hand-held Chain Saws"
of the European Coordination of Notified Bodies in the field of PPE

Number of RfU	Revision	Reference	Keywords	Approved by Vertical Group 7	Approved by Horizontal Committee	Approved by PPE Expert Group
07-001	01	EN 381-5 Clause: 6.4	Seam strength, attachment of protective material	23/03/2005	15/06/2011	15/05/2012
07-002	01	89/686/EECArticle 10.4	Identification of the model	23/03/2005	15/06/2011	15/05/2012
07-004	01	EN 381-5 Clause: 5	Protective coverage	23/03/2005	15/06/2011	15/05/2012
07-005	01	EN 381-5 Clause: 6.4	Attachment of protective material	23/03/2005	15/06/2011	15/05/2012
07-006	01	EN 381-5 Clause: 6.4	Certification and testing of chaps	23/03/2005	15/06/2011	15/05/2012
07-009	01	EN 381	Durability of the markings	23/03/2005	15/06/2011	15/05/2012
07-010	01	EN 381	Visibility of the markings	23/03/2005	15/06/2011	15/05/2012
07-011	01	EN 381	Verification of the washing	23/03/2005	15/06/2011	15/05/2012
07-012	01	EN 381	Height of footwear	23/03/2005	15/06/2011	15/05/2012
07-013	01	EN 381	Chaps	23/03/2005	15/06/2011	15/05/2012
07-014	01	EN 381-10 Clause: 9.4	Attachment of protective material in jackets	23/03/2005	15/06/2011	15/05/2012
07-016	01	EN 381-7 Clause: 4.4	Protective gloves, attachment of protective material	23/03/2005	15/06/2011	15/05/2012

Note: Recommendation for Use sheets which deal with withdrawn and / or superseded standards and which no longer apply to new certifications are published as reference for previous files.

	CO-ORDINATION OF NOTIFIED BODIES PPE-Directive 89/686/EEC + amendments RECOMMENDATION FOR USE	CNB/P/07.001 Revision Language: E

Number of pages: 1	Date: 23/3/2005	Approval by : Approved on :
Origin : Vertical Group 7 'Protective Clothing against Hand-held Chain Saws'		☒ Vertical Group 20/09/1996 & on the 23/03/2005 ☒ Horizontal Committee 15/06/2011 ☒ Standing Committee 15/05/2012

Question related to: Annex: Article:	EN/prEN: 381-5 Clause: 6.4	Other:

Key words: Seam strength, attachment of protective material

Question: Should the seam strength test which is applied to design A and design B leg protectors apply also to design C leg protectors? In design C leg protectors the protective material is not attached to the out material of the trousers along the legs, but the protective material is joined together with one or two seams running parallel to the leg. EN 381-5 does not require the strength of these seams to be tested but the risk of a failed seam is a lack of protection.

Solution:

VG7 proposes that seams joining the protective material in design C leg protectors are subjected to the seam strength tests. Test along the lines of EN 381-2:1995 clause 9 with a minimum requirement of 200 N.

Sent for information to: ☒ members of the VG ☐ other(s) VG ☒ HC (2) ☐ TC (3) ☒ SC (4) ☐ other (5)

(3): (5):

(1) Essential safety requirement
(2) HC = horizontal committee
(3) N° of CEN/TC (Secretary & Chairman)
(4) EEC Standing Committee 89/392
(5) To be specified

	CO-ORDINATION OF NOTIFIED BODIES PPE-Directive 89/686/EEC + amendments RECOMMENDATION FOR USE	CNB/P/07.002 Revision Language: E

Number of pages: 1	Date: 23/3/2005	Approval by : Approved on :
Origin : Vertical Group 7 'Protective Clothing against Hand-held Chain Saws'		☒ Vertical Group 20/09/1996 & on the 23/03/2005 ☒ Horizontal Committee 15/06/2011 ☒ Standing Committee 15/05/2012

Question related to: PPE Directive 89/686 Annex: Article: 10.4	EN/prEN: Clause:	Other:

Key words: Identification of the model

Question:

Certificates shall incorporate the descriptions and drawings necessary for the identification of the model. What is necessary besides make, style and article number to identify the approved model?

Solution:

Certificates shall include enough information to relate the article number to the information in the technical file.

Sent for information to: ☒ members of the VG ☐ other(s) VG ☒ HC (2) ☐ TC (3) ☒ SC (4) ☐ other (5)

(3): (5):

(1) Essential safety requirement
(2) HC = horizontal committee
(3) N° of CEN/TC (Secretary & Chairman)
(4) EEC Standing Committee 89/392
(5) To be specified

	CO-ORDINATION OF NOTIFIED BODIES PPE-Directive 89/686/EEC + amendments RECOMMENDATION FOR USE	CNB/P/07.004 Revision Language: E

Number of pages: 1	Date: 23/3/2005	Approval by : Approved on :
Origin : Vertical Group 7 'Protective Clothing against Hand-held Chain Saws'		☒ Vertical Group 20/09/1996 & on the 23/03/2005 ☒ Horizontal Committee 15/06/2011 ☒ Standing Committee 15/05/2012

Question related to: Annex: Article:	EN/prEN: 381-5 Clause: 5 Ergonomic considerations	Other:

Key words: Protective coverage

Question:

What are the requirements concerning the protective area below the fly (between the bottom of the zip and the crotch point.)?

See clause 5 and the sentence beginning “Between the crotch and fly…….”

Many approved trousers have gaps in the protection bigger than the maximum requirement

Solution:

Figure 1 of EN 381-5 shows that the gap in the protective material goes from 30 mm at the zip to 0 mm at the crotch.

The gap at the zipper shall be no more than 30 mm.

Underneath the zipper, the protective material must meet or overlap (i.e. gap in protective material is 0 mm)

Leggings must be joined at least down to the crotch.

Sent for information to: ☒ members of the VG ☐ other(s) VG ☒ HC (2) ☐ TC (3) ☒ SC (4) ☐ other (5)

(3): (5):

(1) Essential safety requirement
(2) HC = horizontal committee
(3) N° of CEN/TC (Secretary & Chairman)
(4) EEC Standing Committee 89/392
(5) To be specified

	CO-ORDINATION OF NOTIFIED BODIES PPE-Directive 89/686/EEC + amendments RECOMMENDATION FOR USE	CNB/P/07.005 Revision Language: E

Number of pages: 1	Date: 23/3/2005	Approval by : Approved on :
Origin : Vertical Group 7 'Protective Clothing against Hand-held Chain Saws'		☒ Vertical Group 20/09/1996 & on the 23/03/2005 ☒ Horizontal Committee 15/06/2011 ☒ Standing Committee 15/05/2012

Question related to: Annex: Article:	EN/prEN: 381-5 Clause: 6.4	Other:

Key words: Attachment of protective material

Question:

What does the following mean in terms of attachment of protective material to trouser legs "…..along the edges of the protective padding along the leg…."

Is it allowed to have the protective material attached by a series of stitches parallel to the leg?

Solution:

The protective padding in design A and B leg protectors (EN 381-5) must be attached down either side of the leg. The attachment may be a line of continuous stitching or groups of stitches no further apart than 5 cm. The requirement for attachment strength of 200 N must be fulfilled.

Sent for information to: ☒ members of the VG ☐ other(s) VG ☒ HC (2) ☐ TC (3) ☒ SC (4) ☐ other (5)

(3): (5):

(1) Essential safety requirement
(2) HC = horizontal committee
(3) N° of CEN/TC (Secretary & Chairman)
(4) EEC Standing Committee 89/392
(5) To be specified

	CO-ORDINATION OF NOTIFIED BODIES PPE-Directive 89/686/EEC + amendments RECOMMENDATION FOR USE	CNB/P/07.006 Revision Language: E

Number of pages: 1	Date: 23/3/2005	Approval by : Approved on :
Origin : Vertical Group 7 'Protective Clothing against Hand-held Chain Saws'		☒ Vertical Group 20/09/1996 & on the 23/03/2005 ☒ Horizontal Committee 15/06/2011 ☒ Standing Committee 15/05/2012

Question related to: Annex: Article:	EN/prEN: 381-5 Clause: 6.4	Other:

Key words: Certification and testing of chaps

Question:

How should chainsaw protective chaps be tested and certified?

Solution:

Do not CE mark using EN 381-5. Instead CE mark against the PPE Directive using relevant parts of EN 381-5.

The manufacturer must provide information on preventing twisting of the chaps in wear

The manufacturer should not mark the garments with EN 381-5.

Sent for information to: ☒ members of the VG ☐ other(s) VG ☒ HC (2) ☐ TC (3) ☒ SC (4) ☐ other (5)

(3): (5):

(1) Essential safety requirement
(2) HC = horizontal committee
(3) N° of CEN/TC (Secretary & Chairman)
(4) EEC Standing Committee 89/392
(5) To be specified

	CO-ORDINATION OF NOTIFIED BODIES PPE-Directive 89/686/EEC + amendments RECOMMENDATION FOR USE	CNB/P/07.009 Revision Language: E

Number of pages: 1	Date: 23/3/2005	Approval by : Approved on :
Origin : Vertical Group 7 'Protective Clothing against Hand-held Chain Saws'		☒ Vertical Group 17/10/1997 & on the 23/03/2005 ☒ Horizontal Committee 15/06/2011 ☒ Standing Committee 15/05/2012

Question related to: Annex: Article:	EN/prEN: 381 Clause:	Other:

Key words: Durability of the markings

Question:

How shall the durability of the markings be assessed?

Solution:

Test samples shall be marked according to EN 381 and EN 340. The durability of the markings can then be tested during the pre-treatment according to the standard.

Sent for information to: ☒ members of the VG ☐ other(s) VG ☒ HC (2) ☐ TC (3) ☒ SC (4) ☐ other (5)

(3): (5):

(1) Essential safety requirement
(2) HC = horizontal committee
(3) N° of CEN/TC (Secretary & Chairman)
(4) EEC Standing Committee 89/392
(5) To be specified

	CO-ORDINATION OF NOTIFIED BODIES PPE-Directive 89/686/EEC + amendments RECOMMENDATION FOR USE	CNB/P/07.010 Revision Language: E

Number of pages: 1	Date: 23/3/2005	Approval by : Approved on :
Origin : Vertical Group 7 'Protective Clothing against Hand-held Chain Saws'		☒ Vertical Group 17/10/1997 & on the 23/03/2005 ☒ Horizontal Committee 15/06/2011 ☒ Standing Committee 15/05/2012

Question related to: Annex: Article:	EN/prEN: 381 Clause:	Other:

Key words: Visibility of the markings

Question:

Where should the product marking be situated?

Solution:

The marking can be inside the garment in conjunction with other product marking at the waist or collar. The markings have to be sewn on.

The pictogram should be on the outside of the garment and should be visible.

The pictogram shall be durable as assessed during the pre-treatment.

Sent for information to: ☒ members of the VG ☐ other(s) VG ☒ HC (2) ☐ TC (3) ☒ SC (4) ☐ other (5)

(3): (5):

(1) Essential safety requirement
(2) HC = horizontal committee
(3) N° of CEN/TC (Secretary & Chairman)
(4) EEC Standing Committee 89/392
(5) To be specified

	CO-ORDINATION OF NOTIFIED BODIES PPE-Directive 89/686/EEC + amendments RECOMMENDATION FOR USE	CNB/P/07.011 Revision Language: E

Number of pages: 1	Date: 23/3/2005	Approval by : Approved on :
Origin : Vertical Group 7 'Protective Clothing against Hand-held Chain Saws'		☒ Vertical Group 17/10/1997 & on the 23/03/2005 ☒ Horizontal Committee 15/06/2011 ☒ Standing Committee 15/05/2012

Question related to: Annex: Article:	EN/prEN: 381 Clause:	Other:

Key words: Verification of the washing

Question:

How many times shall test samples be washed (or dry-cleaned) before testing?

Solution:

Test samples shall be washed at least five times before testing. If the manufacturer has claimed, for example, that the garment can be washed 40x, this shall be verified by washing the garment 40x before testing.

The notified body shall examine the instructions supplied by the manufacturer for information relating to ageing and for the maximum number of washes before the garment should be discarded.

Sent for information to: ☒ members of the VG ☐ other(s) VG ☒ HC (2) ☐ TC (3) ☒ SC (4) ☐ other (5)

(3): (5):

(1) Essential safety requirement
(2) HC = horizontal committee
(3) N° of CEN/TC (Secretary & Chairman)
(4) EEC Standing Committee 89/392
(5) To be specified

	CO-ORDINATION OF NOTIFIED BODIES PPE-Directive 89/686/EEC + amendments RECOMMENDATION FOR USE	CNB/P/07.012 Revision Language: E

Number of pages: 1	Date: 23/3/2005	Approval by : Approved on :
Origin : Vertical Group 7 'Protective Clothing against Hand-held Chain Saws'		☒ Vertical Group 17/10/1997 & on the 23/03/2005 ☒ Horizontal Committee 15/06/2011 ☒ Standing Committee 15/05/2012

Question related to: Annex: Article:	EN/prEN: 381 Clause:	Other:

Key words: Height of footwear

Question:

Can chainsaw protective footwear with an upper height lower than 195 mm be certified?

Solution:

Such footwear can be certified using the directive.

CEN TC 161 shall take this into account when revising the standard.

Sent for information to: ☒ members of the VG ☐ other(s) VG ☒ HC (2) ☐ TC (3) ☒ SC (4) ☐ other (5)

(3): (5):

(1) Essential safety requirement
(2) HC = horizontal committee
(3) N° of CEN/TC (Secretary & Chairman)
(4) EEC Standing Committee 89/392
(5) To be specified

	CO-ORDINATION OF NOTIFIED BODIES PPE-Directive 89/686/EEC + amendments RECOMMENDATION FOR USE	CNB/P/07.013 Revision Language: E

Number of pages: 1	Date: 23/3/2005	Approval by : Approved on :
Origin : Vertical Group 7 'Protective Clothing against Hand-held Chain Saws'		☒ Vertical Group 17/10/1997 & on the 23/03/2005 ☒ Horizontal Committee 15/06/2011 ☒ Standing Committee 15/05/2012

Question related to: Annex: Article:	EN/prEN: 381 Clause:	Other:

Key words: Chaps

Question:

How can chaps be certified?

Solution:

Cut resistance shall be the same as for trousers i.e. 20 m/s. The minimum coverage shall be the same as for design A trousers of the same size. The chaps shall be sewn together at the front in the fly region. The maximum width of the unprotected area at the fly shall be 30 mm. Chaps shall stay in place during use. There shall be adjustable straps at the upper thigh, above the knee, below the knee and at the ankle. The strength of the attachment of straps to the chap shall be at least 200 N. The instructions shall include donning and doffing advice, how to tighten the straps to the correct tension and advice on when such products could be used (e.g. occasionally or in a hot environment).

Sent for information to: ☒ members of the VG ☐ other(s) VG ☒ HC (2) ☐ TC (3) ☒ SC (4) ☐ other (5)

(3): (5):

(1) Essential safety requirement
(2) HC = horizontal committee
(3) N° of CEN/TC (Secretary & Chairman)
(4) EEC Standing Committee 89/392
(5) To be specified

	CO-ORDINATION OF NOTIFIED BODIES PPE-Directive 89/686/EEC + amendments RECOMMENDATION FOR USE	CNB/P/07.014 Revision Language: E

Number of pages: 1	Date: 23/3/2005	Approval by : Approved on :
Origin : Vertical Group 7 'Protective Clothing against Hand-held Chain Saws'		☒ Vertical Group 23/03/2005 ☒ Horizontal Committee 15/06/2011 ☒ Standing Committee 15/05/2012

Question related to: Annex: Article:	EN/prEN: 381 part 10 Clause: 9.4	Other:

Key words: attachment of protective material in jackets

Question:

Clause 9.4 states that the test can be stopped when the force is above 500 N. However part 11 requires a minimum strength of 200 N so surely the test can be stopped once it has been established that the strength of attachment is >200 N

Solution:

It is sufficient to establish that the attachment strength is > 200 N (for both EN 381-2 and EN 381-10)

Sent for information to: ☒ members of the VG ☐ other(s) VG ☒ HC (2) ☐ TC (3) ☒ SC (4) ☐ other (5)

(3): (5):

(1) Essential safety requirement
(2) HC = horizontal committee
(3) N° of CEN/TC (Secretary & Chairman)
(4) EEC Standing Committee 89/392
(5) To be specified

	CO-ORDINATION OF NOTIFIED BODIES PPE-Directive 89/686/EEC + amendments RECOMMENDATION FOR USE	CNB/P/07.016 Revision Language: E

Number of pages: 1	Date: 23/3/2005	Approval by : Approved on :
Origin : Vertical Group 7 'Protective Clothing against Hand-held Chain Saws'		☒ Vertical Group 23/03/2005 ☒ Horizontal Committee 15/06/2011 ☒ Standing Committee 15/05/2012

Question related to: Annex: Article:	EN/prEN: 381 part 7 Clause: 4.4	Other:

Key words: Protective gloves, attachment of protective material

Question:

Clause 4.4 requires that protective material should be permanently attached to the glove. How should the protective material be attached and is it sufficient to attach it along one edge only?

Solution:

The Protective material in gloves should be attached (e.g. stitched) around all four sides.

Sent for information to: ☒ members of the VG ☐ other(s) VG ☒ HC (2) ☐ TC (3) ☒ SC (4) ☐ other (5)

(3): (5):

(1) Essential safety requirement
(2) HC = horizontal committee
(3) N° of CEN/TC (Secretary & Chairman)
(4) EEC Standing Committee 89/392
(5) To be specified

Vertical Recommendation for Use sheets (RfUs)
of Vertical Group 8 "Lifejackets"
of the European Coordination of Notified Bodies in the field of PPE

No.	Version	Reference	Key words	Approved by Vertical Group 8	Approved by Horizontal Committee	Approved by PPE Expert Group
08.002	04	ISO 12402-5:2006, ISO 12402-5:2006+A1:2010	Snorkel Vest	November 2007	23/10/2012	12/03/2013
08.003	04	ISO 12402-7:2007, ISO 12402-7:2007+A1:2011, clause 4.1.6.4, 4.9, table 13	Inflation chamber material	November 2007	23/10/2012	12/03/2013
08.004	03	ISO 12402-7:2007, ISO 12402-7:2007+A1:2011, clause 4.2, 4.3	Fabric and sewing thread	October 2009	23/10/2012	12/03/2013
08.005	05	EN ISO 12402-8:2006, EN ISO 12402-8:2006+A1:2011	Sprayhood clear material	March 2015	01/07/2015	03/11/2015
08.006	03	ISO 12402-6:2006, ISO 12402-6:2006+A1:2010, clause 5.5, 5.5.1, 6.5	Proposal for 50N flotation suits	August 2010	23/10/2012	12/03/2013
08.007	03	EN ISO 12402-7:2007, ISO 12402-7:2007+A1:2011, clause 4.7	Hardware	August 2010	23/10/2012	12/03/2013
08.009	03	EN ISO 12402-5:2006+A1:2010 and ISO 12402-6:2006+A1:2010, clause 5.3.4	Buoyancy requirements and testing procedures for 2 piece 50N flotation suits	August 2010	23/10/2012	12/03/2013
08.010	03	EN ISO 12402-7:2007+A1:2011, clause 4.8, table 12	Inherently buoyant material - thickness of foam	September 2010	23/10/2012	12/03/2013
08.011	03	EN ISO 12402-4:2006, ISO 12402-4:2006+A1:2010, clause 5.6.3.1	In water performance - faceplane	September 2010	23/10/2012	12/03/2013
08.012	03	EN ISO 12402-6:2006, ISO 12402-6:2006+A1:2010, clause 5.2, 5.2.4 & 6.3	White water sports devices	February 2011	23/10/2012	12/03/2013
08.013	03	EN ISO 12402-7:2007+A1:2011, clause 4.2 and table 1, 4.4 and table 5	Webbing and thread requirements	February 2011	23/10/2012	12/03/2013
08.014	03	ISO 12402-7:2007+A1:2011, clause 4.1.6.4, 4.3.3	Colour and illumination issues	April 2010	23/10/2012	12/03/2013
08.015	03	ISO 12402-7:2007+A1:2011, clause 4.9 and table 13	Inflation chamber material	April 2010	23/10/2012	12/03/2013
08.016	02	EN ISO 12402-9:2006+A1:2011	Buoyancy test method	01/03/2013	01/07/2015	03/11/2015
08.017	02	EN ISO 12402-9:2006+A1:2011	Lifting loop load test	01/03/2013	01/07/2015	03/11/2015
08.018	02	EN ISO 12402-6:2006+A1:2010	Constant wear devices	01/03/2013	01/07/2015	03/11/2015
08.019	02	EN ISO 12402-7:2007+A1:2011	Oral inflation systems	01/03/2013	01/07/2015	03/11/2015
08.022	03	EN ISO 12402-7+A1:2011	IRM oil, foam testing	01/03/2013	01/07/2015	03/11/2015
08.023	02	EN 13138-1, -2, -3:2008	Colour requirements	01/03/2013	01/07/2015	03/11/2015

Vertical Recommendation for Use sheets (RfUs)
of Vertical Group 8 "Lifejackets"
of the European Coordination of Notified Bodies in the field of PPE

No.	Version	Reference	Key words	Approved by Vertical Group 8	Approved by Horizontal Committee	Approved by PPE Expert Group
08.026	02	EN ISO 12402-9:2006+A1:2011	Inflation tests	31/01/2014	01/07/2015	03/11/2015
08.027	02	EN ISO 15027-1:2012	Resistance to illumination	31/01/2014	01/07/2015	03/11/2015
08.028	03	EN ISO 15027-1:2012	Thermal testing	March 2015	01/07/2015	03/11/2015
08.032	01	EN ISO 12402-2:2006+A1:2010, EN ISO 12402-3:2006+A1:2010	Face plane angle and torso angle	March 2015	01/07/2015	03/11/2015
08.033	01	EN ISO 12402-9:2006+A1:2011	Temperature cycle test and rotating shock bin test	28/07/2016	09/01/2017	10/04/2017
08.035	01	EN ISO 12402:2006+A1:2010, Parts 2-6	Pouch type PFDs	05/10/2016	09/01/2017	10/04/2017
08.036	00	EN ISO 15027-1:2012, EN ISO 15027-2:2012	Preconditioning of immersion suit material samples	05/10/2016	09/01/2017	10/04/2017

Note: Recommendation for Use sheets which deal with withdrawn and / or superseded standards and which no longer apply to new certifications are published as reference for previous files.

	CO-ORDINATION OF NOTIFIED BODIES **PPE-Directive 89/686/EEC + amendments** **RECOMMENDATION FOR USE**	CNB/P/08.002 Revision 04 Language: E

Number of pages: 1	Date: November 2007	Approval by :	Approved on :
Origin : VG8		☒ Vertical Group ☒ Horizontal Committee ☒ Standing Committee	November 2007 23.10.2012 12.03.2013

Question related to: Directive 89/686/EEC	EN: ISO 12402-5:2006 and ISO 12402-5:2006+A1:2010	Other:
	Clause:	

Key words: Snorkel Vest.

Question:

There has been confusion about the testing requirements of 'Snorkel Vests'.

Solution:

VG8 agree that a Snorkel Vest is a Buoyant Device for use where help is close at hand and so these devices should be tested as a buoyancy aid in accordance with ISO 12402-5 for level 50 devices.

Sent for information to: ☒ members of the VG ☐ other(s) VG ☒ HC (2) ☐ TC (3) ☒ SC (4) ☐ other (5)

(3): (5):

(1) Essential safety requirement
(2) HC = horizontal committee
(3) N° of CEN/TC (Secretary & Chairman)
(4) EEC Standing Committee 89/392
(5) To be specified

	CO-ORDINATION OF NOTIFIED BODIES **PPE-Directive 89/686/EEC + amendments** **RECOMMENDATION FOR USE**	CNB/P/08.003 Revision 04 Language: E

Number of pages: 1	Date: November 2007	Approval by :	Approved on :
Origin : VG8		☒ Vertical Group ☒ Horizontal Committee ☒ Standing Committee	November 2007 23.10.2012 12.03.2013

Question related to: Directive 89/686/EEC	EN: ISO 12402-7:2007 and ISO 12402-7:2007+A1:2011	Other:
	Clause: 4.1.6.4, 4.9, Table 13	

Key words: Inflation Chamber Material

Question:

If a bladder is covered when un-inflated should accelerated weather be undertaken on the bladder material?

Solution:

VG8 agree that inflation chamber material which is covered during normal usage (i.e. packed ready four use- uninflated) shall not undertake accelerated weathering as it is not exposed to sunlight under normal use.

Sent for information to: ☒ members of the VG ☐ other(s) VG ☒ HC (2) ☐ TC (3) ☒ SC (4) ☐ other (5)

(3): (5):

(1) Essential safety requirement
(2) HC = horizontal committee
(3) N° of CEN/TC (Secretary & Chairman)
(4) EEC Standing Committee 89/392
(5) To be specified

	CO-ORDINATION OF NOTIFIED BODIES **PPE-Directive 89/686/EEC + amendments** **RECOMMENDATION FOR USE**	CNB/P/08.004 Revision 03 Language: E

Number of pages: 1	Date: Oct 2009	Approval by :	Approved on :
Origin : VG 8		☒ Vertical Group ☒ Horizontal Committee ☒ Standing Committee	October 2009 23.10.2012 12.03.2013

Question related to: Directive 89/686/EEC	EN: ISO 12402-7:2007 and ISO 12402-7:2007+A1:2011 Clause: 4.2 & 4.3	Other:

Key words:

Fabric & Sewing Thread

Question

Is it necessary to test each colour in a range of the same fabric and sewing thread?

Solution:

It was agreed by VG8 - If a fabric/thread manufacturer has a range of colours then it is acceptable to test the brightest and the darkest colour and then test a sample of the colours in between these two, the number of additional colours tested is a decision for the Notified Body to make but it should representative of the range being produced.

This agreement however does not apply to Rescue Devices.

Sent for information to: ☒ members of the VG ☐ other(s) VG ☒ HC (2) ☐ TC (3) ☒ SC (4) ☐ other (5)

(3): (5):

(1) Essential safety requirement
(2) HC = horizontal committee
(3) N° of CEN/TC (Secretary & Chairman)
(4) EEC Standing Committee 89/392
(5) To be specified

	CO-ORDINATION OF NOTIFIED BODIES **PPE-Directive 89/686/EEC + amendments** **RECOMMENDATION FOR USE**	CNB/P/08.005 Revision 05 Language: E

Number of pages: 1	Date: 13.02.2015	Approval by :	Approved on :
Origin : VG8		☒ Vertical Group ☒ Horizontal Committee ☒ Standing Committee	March 2015 01/07/2015 03/11/2015

Question related to: Directive 89/686/EEC	EN: ISO 12402-8:2006 and ISO 12402-8:2006+A1:2011 Clause: 5.5.1	Other:

Key words:

Sprayhood clear material

Question:

In ISO 12402-8:2006+A1:2011, Clause 5.5 for Sprayhoods. There is a requirement to have the clear material of a sprayhood to be compliant with ISO 12402-7. However, there is no requirement specifically for clear material in ISO 12402-7:2007+A1:2011. There is a requirement in Table 21 for Window material but this is specifically for viewing an inflation mechanism. These requirements are also excessive to what the requirement for clear material on a sprayhood would be (e.g. minimum thickness is excessive for a sprayhood window and could cause packing difficulties).

Solution:

It was agreed that in paragraph 4, line 1 of clause 5.5.1 in ISO 12402-8:2006+A1:2011 the words 'compliant with ISO 12402-7' is not relevant for the sprayhood materials and the below compliance criteria shall be used:

A sprayhood should comply with all requirements of ISO 12402-8 and not affect the device meeting all requirements when tested for in water performance according to ISO 12402-9, clause 5.6.

When tested as part of the PFD in accordance with ISO 12402-9:2006+A1:2011, clause 5.5.3 and 5.5.4 the sprayhood materials, including any clear window material, should show no sign of damage such as shrinking, cracking, swelling, dissolution or change of mechanical qualities.

Sent for information to: ☒ members of the VG ☐ other(s) VG ☒ HC (2) ☒ TC (3) ☒ SC (4) ☐ other (5)

(3): (5):

(1) Essential safety requirement
(2) HC = horizontal committee
(3) N° of CEN/TC (Secretary & Chairman)
(4) EEC Standing Committee 89/392
(5) To be specified

	CO-ORDINATION OF NOTIFIED BODIES **PPE-Directive 89/686/EEC + amendments** **RECOMMENDATION FOR USE**	CNB/P/08.006 Revision 03 Language: E

Number of pages: 1	Date: 10.08.2010	Approval by :	Approved on :
Origin : VG8		☒ Vertical Group ☒ Horizontal Committee ☒ Standing Committee	August 2010 23.10.2012 12.03.2013

Question related to: Directive 89/686/EEC	EN/prEN: ISO 12402-6:2006 and ISO 12402-6:2006+A1:2010 Clause: 5.5, 5.5.1, 6.5	Other:

Key words:

VG8 Proposal for 50N Flotation Suits (EN ISO 12402-6)

Question:

As there is a clear difference in design and performance of 50N flotation suits compared to standard 50N buoyancy aids, what are the additional testing requirements for testing and marking of 50N Flotation suits?

Solution:

When testing of one and two piece flotation suits these should be tested as special purpose devices under ISO 12402-6:2006+A1:2010:

Additional requirements to be included in ISO 12402-6 as an additional clause specifically for this type of suit are as follows:

Flotation suits tested in accordance with ISO 12402-5:2006+A1:2010 for PFD's level 50 shall be considered as Special Purpose Devices and tested in accordance with the requirements of ISO 12402-5:2009+A1:2010 and the test methods specified in ISO 12402-9:2006+A1:2011.
In addition to the tests in ISO 12402-5:2006+A1:2010, 5.6 the Encumbrance assessment test in clause 5.5.1 should be carried out.

5.5.1 Encumbrance Assessment
During the in water performance testing EN ISO 12402-5:2006+A1:2010 (Clause 5.6.3) the test subjects shall emerge from the water by climbing a distance of 2500mm up and down a vertical ladder, the suit shall drain sufficiently to avoid causing encumbrance to the test subjects.

Additionally 50N Suits should be marked in accordance with the following statement:

6.5 50N Flotation Suits
Each PFD shall be marked with the details in 6.2 and the following:

"When a 50N Suit is worn and used away from a bank or shore where help or means of rescue are NOT close at hand, the suit should be worn in conjunction with a Lifejacket, performance level 275."

This information should be considered as state of the art until the official amendments are published.

It is confirmed that this is the common sense of the experts of VG 8 and also those responsible for the Standardisation of PFD's and these papers are in the procedures of CEN and ISO.

Sent for information to: ☒ members of the VG ☐ other(s) VG ☒ HC (2) ☐ TC (3) ☒ SC (4) ☐ other (5)

(3): (5):

(1) Essential safety requirement
(2) HC = horizontal committee
(3) N° of CEN/TC (Secretary & Chairman)
(4) EEC Standing Committee 89/392
(5) To be specified

	CO-ORDINATION OF NOTIFIED BODIES **PPE-Directive 89/686/EEC + amendments** **RECOMMENDATION FOR USE**	CNB/P/08.007 Revision 03 Language: E

Number of pages: 1	Date: 10.08.2010	Approval by :	Approved on :
Origin : VG8		☒ Vertical Group ☒ Horizontal Committee ☒ Standing Committee	August 2010 23.10.2012 12.03.2013

Question related to: Directive 89/686/EEC	EN/prEN: EN ISO 12402-7:2007 and ISO 12402-7:2007+A1:2011 Clause: 4.7	Other:

Key words:

Hardware

Question:

The requirements and methods when testing hardware according to clause 4.7 are based on specific testing of combination of webbing and closure and not a closure test only (as intended).

Solution:

The intention of the test must be to verify the actual strength of the buckles after several exposures.

The following solution is recommended:

No buckle may fail due to webbing breakage or slippage. If failure occurs due to the webbing it is recommended that another type of webbing is used for the test.

The slippage properties for the specific webbing and closure combination are verified in clause 5.5.1, Mechanical Properties Test and partly in clause 5.6, Human Subject Performance Test.

Sent for information to: ☒ members of the VG ☐ other(s) VG ☒ HC (2) ☐ TC (3) ☒ SC (4) ☐ other (5)

(3): (5):

(1) Essential safety requirement
(2) HC = horizontal committee
(3) N° of CEN/TC (Secretary & Chairman)
(4) EEC Standing Committee 89/392
(5) To be specified

	CO-ORDINATION OF NOTIFIED BODIES **PPE-Directive 89/686/EEC + amendments** **RECOMMENDATION FOR USE**	CNB/P/08.009 Revision 3 Language: E

Number of pages: 1	Date: 11/08/2010	Approval by : Approved on :
Origin : VG 8		☒ Vertical Group August 2010 ☒ Horizontal Committee 23.10.2012 ☒ Standing Committee 12.03.2013

Question related to: Directive 89/686/EEC	EN ISO 12402-5:2006+A1:2010 and ISO 12402-6:2006+A1:2010 Clause: 5.3.4	Other:

Key words:

Buoyancy requirements and testing procedures for 2 piece 50N flotation suits

Question :

The following points were discussed at the last VG8 meeting on 16th June 2010 with regards to testing of 2 piece flotation suits:

1. If a manufacturer wishes to test and certify a 2 piece flotation suit, should the jacket and trousers meet the minimum buoyancy requirements as individual pieces, due to the likelihood of either piece being worn as a single item, or, can the garment just be marked that the device does not work as a PFD unless worn as a two piece set?
2. Should the individual pieces be tested in accordance with the in water performance requirements in clause 5.6 of ISO 12402-5:2006+A1:2010? i.e. the jacket is tested alone, the trousers are tested alone, and the combination of the two is tested together.

Solution:

1. Each piece of a 2 piece set must meet the minimum buoyancy requirements according to ISO 12402-5:2006+A1:2010.

   It is not satisfactory for the product only to be marked as there is always the possibility that the end user will remove either the jacket or trousers in warm/ cold temperatures.
2. Each piece of a 2 piece set must meet the in water requirements of ISO 12402-5:2006+A1:2010. The requirements must be met with both the individual garments and as a combination of a 2 piece set.

Sent for information to: ☒ members of the VG ☐ other(s) VG ☒ HC (2) ☐ TC (3) ☒ SC (4) ☐ other (5)

(3): (5):

(1) Essential safety requirement
(2) HC = horizontal committee
(3) N° of CEN/TC (Secretary & Chairman)
(4) EEC Standing Committee 89/392
(5) To be specified

	CO-ORDINATION OF NOTIFIED BODIES **PPE-Directive 89/686/EEC + Amendments** **RECOMMENDATION FOR USE**	CNB/P/08.010 Revision 3 Language: E

Number of pages: 1	Date: September 2010	Approval by :	Approved on :
Origin : VG 8		☒ Vertical Group ☒ Horizontal Committee ☒ Standing Committee	September 2010 23.10.2012 12.03.2013

Question related to: Directive 89/686/EEC	EN ISO 12402-7:2007+A1:2011 Clause: 4.8, Table 12	Other:

Key words:
Inherently buoyant material – Thickness of foam

Question :

The standard does not clearly spell out which thickness shall be tested according to EN ISO 12402-7.

This can be a potential problem e.g. if a device is manufactured with a 5 mm foam but only the foam in the thickness of 30 mm has been tested according to EN ISO 12402-7.

It is FORCE Technology´s experience that the thinner layers of foam are more likely to fail the tests mentioned in EN ISO 12402-7 than thicker layers.

May a manufacturer use a foam thickness which thickness have not been tested according to EN ISO 12402-7 or covered be a range as specified in EN ISO 12402-7, clause 4.1.2?

Solution:

No - Any type of inherently buoyant material of the same thickness as used in the device shall prove to have properties in accordance with EN ISO 12402-7:2007+A1:2011, clause 4.8 or be covered by a range according to EN ISO 12402-7:2007+A1:2011, clause 4.1.2 if the range has been successfully tested in accordance with EN ISO 12402-7:2007+A1:2011, clause 4.8.

Sent for information to: ☒ members of the VG ☐ other(s) VG ☒ HC (2) ☐ TC (3) ☒ SC (4) ☐ other (5)
(3): (5):

(1) Essential safety requirement
(2) HC = Horizontal Committee
(3) N° of CEN/TC (Secretary & Chairman)
(4) EEC Standing Committee 89/392
(5) To be specified

	CO-ORDINATION OF NOTIFIED BODIES **PPE-Directive 89/686/EEC + Amendments** **RECOMMENDATION FOR USE**	CNB/P/08.011 Revision 3 Language: E

Number of pages: 1	Date: 10.09.2010	Approval by : Approved on :
Origin : VG 8		☒ Vertical Group September 2010 ☒ Horizontal Committee 23.10.2012 ☒ Standing Committee 12.03.2013

Question related to: Directive 89/686/EEC	EN ISO 12402-4:2006 and ISO 12402-4:2006+A1:2010 Clause: 5.6.3.1	Other:

Key words:
In water performance - faceplane

Question :
The standard ISO 12402-4:2006+A1:2010 has minimum in water requirements for Freeboard (min 80mm), Body angle (min 30° degrees) and face plane (min 20°).
The EN 395:1995 standard did not have a requirement for face plane.

Solution:

The requirement for face plane on a 100N device is replaced with the requirement below in order to bring it in line with the existing requirements of a 100N device under EN 395:1995.

Requirement for 100N devices:
The face plane must be positive.

Sent for information to: ☒ members of the VG ☐ other(s) VG ☒ HC (2) ☐ TC (3) ☒ SC (4) ☐ other (5)
(3): (5):

(1) Essential safety requirement
(2) HC = Horizontal Committee
(3) N° of CEN/TC (Secretary & Chairman)
(4) EEC Standing Committee 89/392
(5) To be specified

	CO-ORDINATION OF NOTIFIED BODIES **PPE-Directive 89/686/EEC + amendments** **RECOMMENDATION FOR USE**	CNB/P/08.012 Revision 03 Language: E

Number of pages: 1	Date: 4th February 2011	Approval by : Approved on : ☒ Vertical Group February 2011 ☒ Horizontal Committee 23.10.2012 ☒ Standing Committee 12.03.2013
Origin : VG8 .		

Question related to: Directive 89/686/EEC	EN/prEN: EN ISO 12402-6:2006 and ISO 12402-6:2006+A1:2010 Clause: 5.2., 5.2.4 & 6.3	Other:

Key words: White water sports devices

Question:

There needs to be clarification of the testing requirements for white water sports devices as defined in ISO 12402-6:2006+A1:2010, Clause 5.2. The following points need to be clarified:

1. The current requirement for shoulder strength of these devices (ISO 12402-6, Clause 5.2.2) is not clearly stated as it refers to the strength requirements in ISO 12401:2009/EN1095:1998 and there is only a dynamic strength test in ISO 12401:2009 which far exceeds any strength a buoyancy aid would be able to withstand.
   What are the minimum strength requirements of such devices?
2. There needs to be a clear distinction between devices intended for general white water use, i.e. recreational white water rafting and 'Commercial white water service' and the relevant additional tests required for each. E.g. some devices that incorporate a quick release mechanism and are intended for use in white water rafting are only intended for recreational use i.e. experienced end users who frequent the sport, and not commercial white water service i.e. end users who are provided with these devices whilst on a 'one off' experience or similar and have no training/familiarity with the sport. It needs clarifying which parts of ISO 12402-6:2006+A1:2010 would be relevant for each of these devices with regards to additional testing/marking etc.
   What additional testing requirements are relevant for such devices?

Solution:

The following proposal is recommended:

1. **As the strength requirement in ISO 12401:2009 is not specified, the following minimum requirements should be used: Horizontal and vertical strength to be increased to that of a lifejacket level 150 and 275. Therefore, horizontal strength should be increased to 3,200N and vertical strength to be increased to 900N.**
2. **It should be identified by the manufacturer what the intended end use of the product is and this should clearly be outlined in the information booklet. If a device is not intended to be a 'commercial white water device' i.e. intended for general white water use by experienced users, then the additional markings in Clause 6.3 are not relevant for these devices. It will undergo the additional strength requirements (Clause 5.2.2), additional tests for the quick release system (Clause 5.2.3) and the in water removal test (Clause 5.2.4.2). The information for intended use will be clearly stated on the product and information booklet.**

   For 'Commercial white water devices' all the tests in Clause 5.2.4 should be applied and the additional marking in Clause 6.3.

Sent for information to: ☒ members of the VG ☐ other(s) VG ☒ HC (2) ☐ TC (3) ☒ SC (4) ☐ other (5)

(3): (5):

(1) Essential safety requirement
(2) HC = horizontal committee
(3) N° of CEN/TC (Secretary & Chairman)
(4) EEC Standing Committee 89/392
(5) To be specified

	CO-ORDINATION OF NOTIFIED BODIES **PPE-Directive 89/686/EEC + amendments** **RECOMMENDATION FOR USE**	CNB/P/08.013 Revision 03 Language: E

Number of pages: 1	Date: 4th February 2011	Approval by :	Approved on :
Origin : VG8		☒ Vertical Group ☒ Horizontal Committee ☒ Standing Committee	February 2011 23.10.2012 12.03.2013

Question related to: Directive 89/686/EEC	EN/prEN: EN ISO 12402-7:2007+A1:2011	Other:
	Clause: 4.2 and Table 1, 4.4 and Table 5.	

Key words: Webbing and Thread requirements

Question:

1. When testing thread and structural webbings in accordance with EN ISO 12402-7:2007 and EN ISO 12402-7:2007+A1:2011 is the 60% retention requirement after the exposure to accelerated weathering still relevant?
2. The current sample length requirement for structural webbings of 1200 mm is posing a problem for exposing the samples when placed in the accelerated weathering chambers. Most typical accelerated weathering chambers have a specimen mount exposing an area of approximately 100 mm x 50 mm. Therefore is it necessary to have such a long sample length?

Solution:

1. No. If a webbing or thread has a tensile strength which far exceeds the minimum requirement in accordance with ISO 12402-7:2007+A1:2011 after standard conditioning, but then does not retain 60% of the tensile strength following the accelerated weathering exposure, it is unfair to fail that sample if the tensile strength is still higher than the minimum requirement prescribed in the standard. It was agreed that these samples should not be classed as a fail as the tensile strength is still greater than the minimum tensile strength requirement.
   It was therefore proposed that the requirements should be changed in Table 1 for sewing thread and Table 5 for webbings to state a minimum requirement following the accelerated weathering exposure instead of retaining 60% strength as follows:
   For sewing thread in Table 1 – Single strand breaking:
   Minimum requirement following standard conditioning = 25N
   Minimum requirement following accelerated weathering = 15N
   For structural webbing in Table 5:
   Minimum requirement following standard conditioning = 1600N
   Minimum requirement following accelerated weathering = 960N

2. No. It was agreed that it would be acceptable to use the sample length requirements in accordance with ISO 13934-1 so that the length of the sample is to be long enough to allow sufficient material to be clamped in the clamps of the tensile machine and is a minimum of 300 mm in length.

Sent for information to: ☒ members of the VG ☐ other(s) VG ☒ HC (2) ☐ TC (3) ☒ SC (4) ☐ other (5)
(3): (5):

(1) Essential safety requirement
(2) HC = horizontal committee
(3) N° of CEN/TC (Secretary & Chairman)
(4) EEC Standing Committee 89/392
(5) To be specified

	CO-ORDINATION OF NOTIFIED BODIES **PPE-Directive 89/686/EEC + amendments** **RECOMMENDATION FOR USE**	CNB/P/08.014 Revision 3 Language: E

Number of pages: 1	Date: April 2010	Approval by : Approved on :
Origin : VG 8		☒ Vertical Group April 2010 ☒ Horizontal Committee 23.10.2012 ☒ Standing Committee 12.03.2013

Question related to: Directive 89/686/EEC	ISO 12402-7:2007+A1:2011 Clause: 4.1.6.4 and 4.3.3	Other:

Key words:

Colour and illumination issues

Question :

It has been found that there is a variation of results between test laboratories when carrying out tests for colour and illumination dependant on the type of equipment used. It has been suggested that there should be a tolerance to include a tolerance of ±5% for the determination of CIE co-ordinates. Is this acceptable?

Solution:

Yes. A ±5% tolerance should be used for the tests prescribed in ISO 12402-7 Clauses 4.1.6.4 and 4.3.3.

Sent for information to: ☒ members of the VG ☐ other(s) VG ☒ HC (2) ☐ TC (3) ☒ SC (4) ☐ other (5)

(3): (5):

(1) Essential safety requirement
(2) HC = horizontal committee
(3) N° of CEN/TC (Secretary & Chairman)
(4) EEC Standing Committee 89/392
(5) To be specified

	CO-ORDINATION OF NOTIFIED BODIES **PPE-Directive 89/686/EEC + amendments** **RECOMMENDATION FOR USE**	CNB/P/08.015 Revision 3 Language: E

Number of pages: 1	Date: April 2010	Approval by :	Approved on :
Origin : VG 8		☒ Vertical Group ☒ Horizontal Committee ☒ Standing Committee	April 2010 23.10.2012 12.03.2013

Question related to: Directive 89/686/EEC	ISO 12402-7:2007+A1:2011 Clause: 4.9 & Table 13	Other:

Key words:

Inflation Chamber Material

Question :

Where an inflation chamber material has previously been tested and passed all of the relevant sections of Clause 4.9 and Table 13, and only a change in colour of textile has occurred, is it necessary to repeat all the tests in Clause 4.9 Table 13 on the additional colour?

Solution:

No. It is only necessary to repeat the following tests on the additional colour as these are the tests that may be affected by the change of colour:

4.9.2.1 Tensile strength test

4.9.2.2 Trapezoid tear strength test

Sent for information to: ☒ members of the VG ☐ other(s) VG ☒ HC (2) ☐ TC (3) ☒ SC (4) ☐ other (5)

(3): (5):

(1) Essential safety requirement
(2) HC = horizontal committee
(3) N° of CEN/TC (Secretary & Chairman)
(4) EEC Standing Committee 89/392
(5) To be specified

	CO-ORDINATION OF NOTIFIED BODIES **PPE-Directive 89/686/EEC + amendments** **RECOMMENDATION FOR USE**	CNB/P/ **08.016** Revision 02 Language: E

Number of pages: 1	Date: 05.02.2013	Approval by :	Approved on :
Origin : VG8		☒ Vertical Group ☒ Horizontal Committee ☒ Standing Committee	01/03/2013 01/07/2015 03/11/2015

Question related to: Directive 89/686/EEC	EN/prEN: ISO 12402-9:2006+A1:2011 Clause: 5.5.9, 5.5.9.3	Other:

Key words:

Buoyancy test method

Question:

The standard currently states:
5.5.9 Buoyancy test
'If the PFD contains inflatable buoyancy, it shall be inflated through the oral inflation tube to the pressure reached by the primary means of inflation (or 1.4 kPa ± 0.1 kPa, if orally inflated). The PFD shall then be enclosed in the cage attached to the weight.'
The buoyancy test should be performed with the inflatable PFD inflated to its intended working pressure to ensure it is representative of the intended use and performance. What is the correct method to be used to determine the working pressure for inflatable lifejackets?

Solution:

The following method should be used when testing inflatable PFD's:

Proposed Method:

To determine the working pressure of the Inflatable PFD the correct size of gas cylinder should be fitted and activated by pulling the manual pull cord. The PFD shall be left for 5 min. The internal pressure of the chamber shall be measured and recorded.

This should be repeated a total of 3 times.

The working pressure of the Inflatable PFD is determined by taking an average of the 3 pressure measurements.

The 24h buoyancy test is then performed with the PFD chamber inflated by air to the determined working pressure.

Sent for information to:	☒ members of the VG	☐ other(s) VG	☒ HC (2)	☒ TC (3)	☒ SC (4)	☐ other (5)
	(3):		(5):			

(1) Essential safety requirement
(2) HC = horizontal committee
(3) N° of CEN/TC (Secretary & Chairman)
(4) EEC Standing Committee 89/392
(5) To be specified

	CO-ORDINATION OF NOTIFIED BODIES **PPE-Directive 89/686/EEC + amendments** **RECOMMENDATION FOR USE**	CNB/P/ **08.017** Revision 02 Language: E

Number of pages: 1	Date: 05.02.2013	Approval by : Approved on :
Origin : VG8		☒ Vertical Group 01/03/2013 ☒ Horizontal Committee 01/07/2015 ☒ Standing Committee 03/11/2015

Question related to: Directive 89/686/EEC	EN/prEN: ISO 12402-9:2006+A1:2011 Clause: 5.5.2.4	Other:

Key words:

Lifting Loop load test

Question:

In ISO 12402-9:2006+A1:2011 the time for the load to be applied in (1 ± 0.1) min whereas under ISO 12402 Parts 2-4:2010 under clause 5.5 it states: 'The load shall be maintained for 30 min, if not specifies otherwise,'

What is the correct load time to be applied?

Solution:

The load time for the lifting loop strength test should be 30 min for lifejackets tested in accordance with ISO 12402 Parts 2-4:2010.

Sent for information to: ☒ members of the VG ☐ other(s) VG ☒ HC (2) ☒ TC (3) ☒ SC (4) ☐ other (5)

(3): (5):

(1) Essential safety requirement
(2) HC = horizontal committee
(3) N° of CEN/TC (Secretary & Chairman)
(4) EEC Standing Committee 89/392
(5) To be specified

	CO-ORDINATION OF NOTIFIED BODIES **PPE-Directive 89/686/EEC + amendments** **RECOMMENDATION FOR USE**	CNB/P/ **08.018** Revision 02 Language: E

Number of pages: 1	Date: 08.06.12	Approval by :	Approved on :
Origin : VG8		☒ Vertical Group ☒ Horizontal Committee ☒ Standing Committee	01/03/2013 01/07/2015 03/11/2015

Question related to: Directive 89/686/EEC	EN/prEN: ISO 12402-6:2006+A1:2010 Clause: n/a	Other:

Key words:

Constant wear devices

Question:

Test Houses have been receiving several enquiries for testing of integral combinations such as Lifejacket with integrated Fall arrest Harness due to the increase in Wind Farm Activity. Such devices are a constant use device not an abandonment device.

What would be the testing requirements of such devices?

Solution:

Testing of such devices will be under ISO 12402-6+A1:2010 as special purpose devices.

PFD's must meet the requirements for both the Lifejacket under ISO 12402 and Fall Arrest Harness for the relevant type of fall arrest harness (current valid versions of EN 341, EN 353, EN 354, EN 355, EN 358, EN 360, EN 361, EN 363, EN 364, EN 813, as appropriate)

This type of device is to be exempt from the donning test.

Sent for information to: ☒ members of the VG ☐ other(s) VG ☒ HC (2) ☒ TC (3) ☒ SC (4) ☐ other (5)

(3): (5):

(1) Essential safety requirement
(2) HC = horizontal committee
(3) N° of CEN/TC (Secretary & Chairman)
(4) EEC Standing Committee 89/392
(5) To be specified

	CO-ORDINATION OF NOTIFIED BODIES **PPE-Directive 89/686/EEC + amendments** **RECOMMENDATION FOR USE**	CNB/P/ **08.019** Revision 02 Language: E

Number of pages: 1	Date: 08.06.12	Approval by :	Approved on :
Origin : VG8		☒ Vertical Group ☒ Horizontal Committee ☒ Standing Committee	01/03/2013 01/07/2015 03/11/2015

Question related to: Directive 89/686/EEC	EN/prEN: ISO 12402-7:2007+A1:2011 Clause: 4.11.1.3	Other:

Key words:

Oral inflation systems

Question:

Paragraph 6 under clause 4.11.1.3 for Oral inflation systems states:

'It shall not be possible to lock an oral inflation mechanism in the open or closed position. A friction fit dusk cap shall not be used to lock the mechanism open.'

Question: Is it possible to test a PFD which includes a lockable oral inflation mechanism as a Part 6, Special purpose device?

Solution:

Yes, but this should be limited to specific applications which are only to be used by specially trained persons.

Sent for information to: ☒ members of the VG ☐ other(s) VG ☒ HC (2) ☒ TC (3) ☒ SC (4) ☐ other (5)

(3): (5):

(1) Essential safety requirement
(2) HC = horizontal committee
(3) N° of CEN/TC (Secretary & Chairman)
(4) EEC Standing Committee 89/392
(5) To be specified

	CO-ORDINATION OF NOTIFIED BODIES **PPE-Directive 89/686/EEC + amendments** **RECOMMENDATION FOR USE**	CNB/P/ **08.022** Revision 03 Language: E

Number of pages: 1	Date: 17.01.13	Approval by : Approved on :
Origin : VG8		☒ Vertical Group 01/03/2013 ☒ Horizontal Committee 01/07/2015 ☒ Standing Committee 03/11/2015

Question related to: Directive 89/686/EEC	EN/prEN: EN ISO 12402-7+A1:2011 Clause: 4.8.2.7	Other:

Key words:

IRM Oil, Foam testing

Question:

1. In clause 4.8.2.7 Oil resistance of foam flotation material it references use of ASTM Reference Oil No. 2. All reference to this oil has been removed from existing tables of ISO 12402-7:2007+A1:2011. Is the use of ASTM Reference Oil No. 2 still to be used for this exposure?

2. What compliance criteria shall be used when testing in accordance with ISO 12402-7:2007+A1:2011, clause 4.8.2.7 with the Diesel exposure?

Solution:

1. Replace ASTM Reference Oil No.2 with Diesel Fuel according to EN 590 (current valid version) to be consistent with exposures throughout the standard.

2. The current compliance criteria in 4.8.2.7 to test the tensile strength of the foam following the exposure is no longer relevant as in most cases in modern PFD's the foam is encased in an outer fabric and so does not play a structural part for strength. It was agreed by VG8 that a buoyancy test is a better indication of compliance criteria as this is the primary function of inherently buoyant foam.

The following compliance criteria should be used when testing in accordance with ISO 12402-7:2007+A1:2011, clause 4.7.2.7:

Sample Requirements:

3 samples of foam (as per Table 12 of ISO 12402-7:2007+A1:2011)

Dimensions: 200 x 200 (min thickness of 20mm)

Exposure

70h in Diesel fuel according to EN 590 (current valid version)

Requirements

The maximum loss of buoyancy for the average of all samples shall not exceed 10 %.

The dimensions of the foam shall be recorded before and after the exposure. The maximum loss of volume in any sample shall not exceed 5 % and there shall be no softening, or deterioration of a material, when compared with unconditioned specimens.

Sent for information to: ☒ members of the VG ☐ other(s) VG ☒ HC (2) ☒ TC (3) ☒ SC (4) ☐ other (5)

(3): (5):

(1) Essential safety requirement
(2) HC = horizontal committee
(3) N° of CEN/TC (Secretary & Chairman)
(4) EEC Standing Committee 89/392
(5) To be specified

	CO-ORDINATION OF NOTIFIED BODIES **PPE-Directive 89/686/EEC + amendments** **RECOMMENDATION FOR USE**	CNB/P/ **08.023** Revision 02 Language: E

Number of pages: 1	Date: 05.02.2013	Approval by :	Approved on :
Origin : VG8		☒ Vertical Group ☒ Horizontal Committee ☒ Standing Committee	01/03/2013 01/07/2015 03/11/2015

Question related to: Directive 89/686/EEC	EN/prEN: EN 13138-1,-2,-3:2008 Clause: 5.1	Other:

Key words:

Colour requirements

Question:

In EN 13138-1,-2,-3:2008, clause 5.1 under general requirements, it states: 'For safety reasons these products shall be in high definition colours. Transparent or dull colour materials are not acceptable. It is recommended that the colour range yellow to red orange is most appropriate although two colour devices in green with white are also acceptable.'

What would be acceptable as 'high definition colours'?

Solution:

These products shall be manufactured in bright colours that are in contrast to the water surface so as to be visible at all times and at any angle when in use. Wholly transparent or materials in any shade of undecorated blue in the visible areas when in use are not acceptable. For garments these colour requirements apply only to the neck shoulder and upper chest area.

Sent for information to: ☒ members of the VG ☐ other(s) VG ☒ HC (2) ☒ TC (3) ☒ SC (4) ☐ other (5)

(3): (5):

(1) Essential safety requirement
(2) HC = horizontal committee
(3) N° of CEN/TC (Secretary & Chairman)
(4) EEC Standing Committee 89/392
(5) To be specified

	CO-ORDINATION OF NOTIFIED BODIES **PPE-Directive 89/686/EEC + amendments** **RECOMMENDATION FOR USE**	CNB/P/**08.026** Revision 02 Language: E

Number of pages: 1	Date: 11.12.2013	Approval by :	Approved on :
Origin : VG 8		☒ Vertical Group ☒ Horizontal Committee ☒ Standing Committee	31/01/2014 01/07/2015 03/11/2015

Question related to: Directive 89/686/EEC	EN: ISO 12402-9:2006+A1:2011 Clause: 5.5.10.2.1	Other:

Key words:

Inflation tests

Question:

There is no test method included in 5.5.10.2.1 for the inflation tests. What is the correct method to perform these tests?

Recommendation.

A test method should be included. The standard currently states:

'5.5.10.2 Inflated PFDs

5.5.10.2.1 The inflation test shall be carried out twice: once at (− 5 ± 1) °C and once at (+ 30 ± 1) °C.'

The following method should be used:

a) Two PFDs shall first be conditioned by exposing them for (5,0 ± 0,1) h at a temperature of (-5 ± 1) °C. The two inflatable PFDs are then inflated. One shall be activated using the automatic inflation system by placing it in sea water at a temperature of (-1 $^{+2}$) °C and the other shall be activated using the manual inflation system.

b) The two PFDs shall then be conditioned by exposing them for (5,0 ± 0,1) h at a temperature of (+30 ± 1) °C. The two inflatable PFDs are then inflated. One shall be activated using the automatic inflation system by placing it in sea water at a temperature of (+30 ± 2) °C and the other shall be activated using the manual inflation system.

Sent for information to: ☒ members of the VG ☐ other(s) VG ☒ HC (2) ☒ TC (3) ☒ SC (4) ☐ other (5)

(3): (5):

(1) Essential safety requirement
(2) HC = horizontal committee
(3) N° of CEN/TC (Secretary & Chairman)
(4) EEC Standing Committee 89/392
(5) To be specified

	CO-ORDINATION OF NOTIFIED BODIES **PPE-Directive 89/686/EEC + amendments** **RECOMMENDATION FOR USE**	CNB/P/**08.027** Revision 02 Language: E

Number of pages: 1	Date: 11.12.2013	Approval by : Approved on :
Origin : VG 8		☒ Vertical Group 31/01/2014 ☒ Horizontal Committee 01/07/2015 ☒ Standing Committee 03/11/2015

Question related to: Directive 89/686/EEC	EN: ISO 15027-1:2012 Clause: 4.12.2	Other:

Key words:

Resistance to illumination

Question:

In the 2012 version of ISO 15027 there is no test to prove pass/fail criteria following the illumination test. How should this be assessed?

Recommendation.

The seam strength test in 4.12.3 should be carried out after the illumination test to validate pass/fail criteria.

Note. This was the requirement in the 2002 version of the standard. The 2002 version stated: '*4.14.4. The tensile strength shall be of at least 300 N per 25 mm.* ***Following exposure to rot or illumination****, the tensile strength shall be measured using the grab method given in EN ISO 13934-2, using specimens of at least 60 mm width and with at least 100mm of material on each side of the test point, with 4 similar seams for each type of seam, cloth and fastening devices (including zip fasteners).'*

Sent for information to: ☒ members of the VG ☐ other(s) VG ☒ HC (2) ☒ TC (3) ☒ SC (4) ☐ other (5)

(3): (5):

(1) Essential safety requirement
(2) HC = horizontal committee
(3) N° of CEN/TC (Secretary & Chairman)
(4) EEC Standing Committee 89/392
(5) To be specified

	CO-ORDINATION OF NOTIFIED BODIES **PPE-Directive 89/686/EEC + amendments** **RECOMMENDATION FOR USE**	CNB/P/**08.028** Revision 03 Language: E

Number of pages: 1	Date: 13th November 2014	Approval by :	Approved on :
Origin : VG 8		☒ Vertical Group ☒ Horizontal Committee ☒ Standing Committee	*March 2015* *01/07/2015* *03/11/2015*

Question related to: Directive 89/686/EEC	EN: ISO 15027-1:2012 Clause: 4.12.2	Other:

Key words:

Thermal testing

Question:

For dual approval of immersion suits in accordance with ISO 15027 and SOLAS can one set of thermal testing be read across for both standards?

Recommendation.

Where thermal tests have been carried out in accordance with SOLAS requirements the results can be used in support of an ISO 15027-3:2012 approval where the test method used (i.e. temperature and exposure time) are identical to the requirements of ISO 15027-3:2012.

Where thermal tests have been carried out in accordance with ISO 15027-3:2012 requirements the results cannot be used in support of a SOLAS approval (unless the test method used for ISO 15027-3:2012 (i.e. temperature and exposure time) is identical to that in the SOLAS testing requirements). Where the test method used is not the same the tests would need to be repeated in accordance with SOLAS testing requirements.

Sent for information to: ☒ members of the VG ☐ other(s) VG ☒ HC (2) ☒ TC (3) ☒ SC (4) ☐ other (5)

(3): (5):

(1) Essential safety requirement
(2) HC = horizontal committee
(3) N° of CEN/TC (Secretary & Chairman)
(4) EEC Standing Committee 89/392
(5) To be specified

	CO-ORDINATION OF NOTIFIED BODIES **PPE-Directive 89/686/EEC + amendments** **RECOMMENDATION FOR USE**	CNB/P/**08.032** Revision 01 Language: E

Number of pages: 1	Date: 13th February 2015	Approval by :	Approved on :
Origin : VG 8		☒ Vertical Group ☒ Horizontal Committee ☒ Standing Committee	*March 2015* 01/07/2015 03/11/2015

Question related to: Directive 89/686/EEC	EN ISO 12402-2:2006+A1:2010 EN ISO 12402-3:2006+A1:2010 Clause: 5.6.3.1	Other:

Key words:

Face plane angle and Torso angle

Question:

In clause 5.6.3.1 of EN ISO 12402-2:2006+A1:2010 for lifejackets level 275 and EN ISO 12402-3:2006+A1:2010 for lifejackets level 150 do the requirements for trunk angle and face plane angle relate to each individual test subject or to the average of all test subjects, as it did previously in the 2006 version of the standards?

Recommendation.

The requirements in clause 5.6.3.1 set the requirements for the average of all test subjects as per the original requirements of EN ISO 12402-2:2006 and EN ISO 12402-3:2006. The requirements for each individual test subject is as follows:

No individual subject's torso angle shall be less than 20° behind vertical.

No individual subject's face plane angle shall be less than 30° above horizontal.

Sent for information to: ☒ members of the VG ☐ other(s) VG ☒ HC (2) ☒ TC (3) ☒ SC (4) ☐ other (5)

(3): (5):

(1) Essential safety requirement
(2) HC = horizontal committee
(3) N° of CEN/TC (Secretary & Chairman)
(4) EEC Standing Committee 89/392
(5) To be specified

	CO-ORDINATION OF NOTIFIED BODIES PPE-Directive 89/686/EEC + amendments RECOMMENDATION FOR USE	CNB/P/ 08.033 Revision 01 Language: E

Number of pages: 1	Date: 11.11.2015	Approval by :	Approved on :
Origin : VG8 – Force Technology		☒ Vertical Group ☒ Horizontal Committee ☒ Standing Committee	*28.07.2016* *09.01.2017* *10.04.2017*

Question related to: Directive 89/686/EEC	EN/prEN: ISO 12402-9:2006+A1:2011	Other:
	Clause: EN ISO 12402-9:2006, clause 5.1, EN ISO 12402-9:2006+A1:2011, clause 5.5.1	

Key words:

Order of testing: Temperature cycle test and rotating shock bin test

Question:

In the standard EN ISO 12402-9:2006, clause 5.1, in the last sentence the following is stated "All tests according to 5.5 shall be carried out after submitting the samples to the temperature cycling test (see 5.5.3) and the rotating shock bin test (see 5.5.2).

In the amendment EN ISO 12402-9:2006+A1:2011 clause 5.5.1, the above-mentioned sentence was deleted and Table 1 and Table 2 were added.

What is the correct order for testing?

Solution:

The temperature cycle test shall always be performed first, then the rotating shock bin test. The two tests shall be performed prior to all other tests.

The reason is that a potentially brake down of a material/component may not show if the rotating shock bin test is performed prior to the temperature cycle test. If a material/component becomes e.g. brittle due to the temperature cycle test, then the material/component will most likely brake/crack if it is subjected to the rotating shock bin test afterwards. If the rotating shock bin test is performed first, then failures of this kind will not be detected or be very hard to detect.

In EN ISO 12402-9:2006, clause 5.1 mentions the temperature cycle first and then the rotating bin test even though the test clause for rotating shock bin test was 5.5.2 and the clause for temperature cycle was 5.5.3. This was because it was part of the requirement to carry out the test in this order. Unfortunately this has been lost with the introduction of Table 1 and Table 2 in ISO 12402-9:2006+A1:2011.

Sent to: ☒ members of the VG ☐ other(s) VG ☒ HC (2) ☐ TC (3) ☒ SC (4) ☐ other (5)

(5)

(1) Essential safety requirement
(2) HC = horizontal committee
(3) N° of CEN/TC (Secretary & Chairman)
(4) EEC Standing Committee 89/392
(5) To be specified

	CO-ORDINATION OF NOTIFIED BODIES PPE-Directive 89/686/EEC + amendments RECOMMENDATION FOR USE	CNB/P/ 08.035 Revision 01 Language: E

Number of pages: 1	Date: 19.09.16	Approval by : Approved on :
Origin : VG8		☒ Vertical Group *05.10.16* ☒ Horizontal Committee *09.01.17* ☒ Standing Committee *10.04.17*

Question related to: Directive 89/686/EEC Annex: Article: 10	EN/prEN: EN ISO 12402:2006+A1:2010 Parts 2-6 Clause: n/a	Other:

Key words:

Pouch type PFD's

Question:

Is it possible to approve a pouch type PFD as a Lifejacket?

Solution:

Not for general use and no defined end user.

For non-specific pouch type PFD's in accordance with ISO 12402-6 with no specific application stated by the manufacturer but intended for general use by no defined end user, this type of PFD can only be certified as a performance level 50 buoyancy, regardless of the amount of buoyancy provided. It must also be marked appropriately with additional warnings on the marked information and user information to inform the user that it is not a PFD without the necessary user intervention

Yes, if restricted to trained users only and for special application which has to be defined in detail

For a pouch type PFD that is intended for a Special Application PFD in accordance with ISO 12402-6 and the relevant part of ISO 12402 dependant of the level of performance claimed. All performance requirements (e.g. self-righting, freeboard, face and body angle) must be fulfilled with the exception of automatic inflation and bringing the candidate directly in the correct floating position after the water entry test. Additional donning tests are to be performed to ensure that donning is simple both in and out of the water and achieved within the one minute time requirement, including any secondary donning.

In addition, the device must be appropriate for its special application and must be restricted to trained users only. It must also be marked appropriately with additional warnings on the marked information and user information to inform the user that it is a special application PFD and it is not a Lifejacket without the necessary user intervention.

Sent to: ☒ members of the VG ☐ other(s) VG ☒ HC (2) ☐ TC (3) ☒ SC (4) ☐ other (5)

(5)

(1) Essential safety requirement
(2) HC = horizontal committee
(3) N° of CEN/TC (Secretary & Chairman)
(4) EEC Standing Committee 89/392
(5) To be specified

	CO-ORDINATION OF NOTIFIED BODIES PPE-Directive 89/686/EEC + amendments RECOMMENDATION FOR USE	CNB/P/ 08.036 Revision 00 Language: E

Number of pages: 1	Date: 19.09.16	Approval by : Approved on : ☒ Vertical Group *05.10.16* ☒ Horizontal Committee *09.01.17* ☒ Standing Committee *10.04.17*
Origin : VG8		

Question related to: Directive 89/686/EEC Annex: Article: 10	EN/prEN: EN ISO 15027-1:2012 & EN ISO 15027-2:2012 Clause: 4.12	Other:

Key words:

Preconditioning of immersion suit material samples

Question:

In ISO 15027 for immersion suit samples the temperature cycling and rotating shock bin test be carried out first prior to all other tests but does this also apply to the material samples too when performing the tests from clause 4.12?

Solution:

Yes

All material samples must go through the temperature cycling test as a preconditioning to all the individual material tests in clause 4.12, but the rotating shock bin test is not applicable for the material samples.

Sent to: ☒ members of the VG ☐ other(s) VG ☒ HC (2) ☐ TC (3) ☒ SC (4) ☐ other (5)

(5)

(1) Essential safety requirement
(2) HC = horizontal committee
(3) N° of CEN/TC (Secretary & Chairman)
(4) EEC Standing Committee 89/392
(5) To be specified

Vertical Recommendation for Use sheets (RfUs)
of Vertical Group 9
"Protective Clothing for Motorcycle Riders and Sports Impact Protectors"
of the European Coordination of Notified Bodies in the field of PPE

Number of RfU	Version	Reference	Keywords	Approved by Vertical Group 9	Approved by Horizontal Committee	Approved by PPE Working Group
09.001	02	EN 1621-1:1997 clause 6.3	Impact protectors in motorcyclists' protective garments	05/11/1997		15/12/2005
09.002	02	EN 1621-1:1997 clause 4.1	Impact protectors for motorcyclists	05/11/1997		15/12/2005
09.003	02	EN 1621-1:1997 clause 6.3	Impact protectors for motorcyclists	14/12/2000		15/12/2005
09.010	01	EN 13594:2002	Motorcycle gloves	17/04/2007	04/12/2014	19/09/2015
09.013	01	EN 14021:2003, EN 1621-1:2012	Elbow protectors in addition to stone shields for motorcycle riders	10/10/2013	27/11/2017	10/07/2018
09.014	02	EN 1621-1:2012, EN 1621-2:2014	Impact protectors for use in motorcycling AND skiing	10/10/2013	27/11/2017	10/07/2018
09.015	01	EN 14021:2003	Motorcyclists stone shields	10/10/2013	04/12/2014	19/09/2015
09.016	01	EN 13595-1:2002	Motorcyclists clothing - Zippers / ventilation areas	10/10/2013	04/12/2014	19/09/2015
09.017	00	EN 1621-1 clause 7 and FprEN 1621-2 clause 6	EN 1621-1: 2012 and EN 1621-2: 2014	10/10/2013	27/11/2017	10/07/2018
09.018	01	EN 1621-1:2012, EN 1621-2:2014	Wet impact test after hydrolytic	10/10/2013	04/12/2014	19/09/2015
09.019	01	EN 16027:2011	Protective goal keepers gloves, impact strength	10/10/2013	04/12/2014	19/09/2015
09.020	00	EN 1621-1:2012 clause 5.2 and EN 1621-2: 2014 clause 4.2	EN 1621-1:2012 & EN 1621-2:2014 Innocuousness	10/10/2013	27/11/2017	10/07/2018
09.021	00	EN 1621-1:2012 clause 8	EN 1621-1:2012 Information by the manufacturer	10/10/2013	27/11/2017	10/07/2018
09.022	00	EN 13594:2015 clause 4.6	Tear Testing, Determination of Pass / Fail, Protective Overlays	28/04/2016	16/02/2018	10/07/2018
09.023	00	EN 1621-1:2012 clauses: 5.3 and 6.3	Impact protectors with ergonomic gaps	13/07/2017	16/02/2018	10/07/2018
09.024	00	EN 1621-2:2014 clause 4.6 Sizing	Motorcyclists back protector sizing intervals	13/07/2017	16/02/2018	10/07/2018

Note: Recommendation for Use sheets which deal with withdrawn and / or superseded standards and which no longer apply to new certifications are published as reference for previous files.

Status: July 2018

	CO-ORDINATION OF NOTIFIED BODIES **PPE-Directive 89/686/EEC + amendments** **RECOMMENDATION FOR USE**	CNB/P/09.001 Revision 02 Language: E

Number of pages: 1	Date : 21/04/2006	Approval by : Approved on :
Origin : Vertical Group 9 'Protective Clothing for Motorcycle Riders and Sports Impact Protectors'		☒ Vertical Group 05.11.1997 ☐ Horizontal Committee ☒ Standing Committee 15.12.2005

Question related to: Annex: Article:	EN/prEN: 1621-1:1997 Clause: 6.3	Other:

Key words:

Impact protectors in motorcyclists' protective garments

Question:

When protectors are fixed in the garment, can they be tested together with the garment layers ?

Solution:

Yes, if the type approval refers to the complete assembly of the garment with incorporated protectors.

In this case the protector alone could even perform less than the required mean value of 35 kN, but this is not necessarily to be tested.

Sent for information to: ☐ members of the VG ☐ other(s) VG ☐ HC (2) ☐ TC (3) ☐ SC (4) ☐ other (5)

(3): (5):

(1) Essential safety requirement
(2) HC = horizontal committee
(3) N° of CEN/TC (Secretary & Chairman)
(4) EEC Standing Committee 89/392
(5) To be specified

	CO-ORDINATION OF NOTIFIED BODIES **PPE-Directive 89/686/EEC + amendments** **RECOMMENDATION FOR USE**	CNB/P/09.002 Revision 02 Language: E

Number of pages: 1	Date : 21/04/2006	Approval by : Approved on :
Origin : Vertical Group 9 'Protective Clothing for Motorcycle Riders and Sports Impact Protectors'		☒ Vertical Group 05.11.1997 ☐ Horizontal Committee ☒ Standing Committee 15.12.2005

Question related to: Annex: Article:	EN/prEN: 1621-1:1997 Clause: 4.1	Other:

Key words:

impact protectors for motorcyclists

Question:

The impact test area is equal the template size area (see clause 4.1). Is the minimum requirement of impact attenuation ($\leq$ 35 kN) applicable also near to the edges ?

Solution:

Yes. Therefore the protector shall provide sufficient protection also near all edges and not only in the core area of the template shape.

Sent for information to: ☐ members of the VG ☐ other(s) VG ☐ HC (2) ☐ TC (3) ☐ SC (4) ☐ other (5)

(3): (5):

(1) Essential safety requirement
(2) HC = horizontal committee
(3) N° of CEN/TC (Secretary & Chairman)
(4) EEC Standing Committee 89/392
(5) To be specified

	CO-ORDINATION OF NOTIFIED BODIES **PPE-Directive 89/686/EEC + amendments** **RECOMMENDATION FOR USE**	CNB/P/09.003 Revision 02 Language: E

Number of pages: 1	Date : 21/04/2006	Approval by : Approved on :
Origin : Vertical Group 9 'Protective Clothing for Motorcycle Riders and Sports Impact Protectors'		☒ Vertical Group 14.12.2000 ☐ Horizontal Committee ☒ Standing Committee 15.12.2005

Question related to: Annex: Article:	EN/prEN: 1621-1:1997 Clause: 6.3	Other:

Key words:

impact protectors for motorcyclists

Question:

Can protectors be approved if, for ergonomic reasons, they have gaps within the template area ?

Solution:

Yes, provided these gaps will be virtually closed when positioned according to the manufacturer's instructions.

Sent for information to: ☐ members of the VG ☐ other(s) VG ☐ HC (2) ☐ TC (3) ☐ SC (4) ☐ other (5)

(3): (5):

(1) Essential safety requirement
(2) HC = horizontal committee
(3) N° of CEN/TC (Secretary & Chairman)
(4) EEC Standing Committee 89/392
(5) To be specified

	CO-ORDINATION OF NOTIFIED BODIES **PPE-Directive 89/686/EEC + amendments** **RECOMMENDATION FOR USE**	CNB/P/09.010 Revision 01 Language: E

Number of pages: 1	Date: *2007/08/18*	Approval by : Approved on :
Origin : SATRA		☒ Vertical Group *2007/04/17* ☒ Horizontal Committee *2014/12/04* ☒ Standing Committee *2015/09/19*

Question related to: Seam Strength Annex: Article:	EN/prEN: 13594: 2002 Clause:	Other:

Key words:

Motorcycle Gloves

Question:

If a motorcycle glove consists of two separate layers such as a textile liner and leather outer that are not attached together (except at the finger tips and cuff) how should the seam burst strength be measured – both layers together or each layer separately with at least one layer achieving a burst pressure > 600 kPa?

Solution:

If the outer leather and lining are only connected at the cuff and finger tips, the glove must be treated as separate layers.

The requirement states "All seams ... between pieces of material forming the protective layer must ...more than 600 kPa" and if you have two layers each with its own seam and test them together you are testing two seams at the same time so cannot assess against the 600 kPa requirement for a single seam.

Sent to: ☒ members of the VG ☐ other(s) VG ☒ HC (2) ☐ TC (3) ☒ SC (4) ☐ other (5)

(5)

(1) Essential safety requirement
(2) HC = horizontal committee
(3) N° of CEN/TC (Secretary & Chairman)
(4) EEC Standing Committee 89/392
(5) To be specified

	CO-ORDINATION OF NOTIFIED BODIES PPE-Directive 89/686/EEC + amendments RECOMMENDATION FOR USE	CNB/P/09.013 Revision 01 Language: E

Number of pages: 1	Date: *(issue date)* 2007/08/19	Approval by : Approved on :
Origin : Vertical Group 9		☒ Vertical Group *2013-10-10* ☒ Horizontal Committee *2017-11-27* ☒ Standing Committee 2018-07-10 *(date)*

Question related to: Annex: Article:	EN/prEN: EN 14021: 2003 & EN 1621-1: 2012 Clause:	Other:

Key words: Elbow protectors in addition to stone shields for motorcycle riders

Question:

EN 14021: 2003 (stone shields) further to chest protectors covers also shoulder and back protectors. However, sometimes, this device is offered to the market with elbow protectors connected to it.

Which standard has to be referred to when it comes to type approval and certification?

Solution:

The additional elbow protectors have to comply with the requirements of their dedicated standard EN 1621-1: 2012

Sent to: ☒ members of the VG ☐ other(s) VG ☒ HC (2) ☐ TC (3) ☐ SC (4) ☐ other (5)

(5)

(1) Essential safety requirement
(2) HC = horizontal committee
(3) N° of CEN/TC (Secretary & Chairman)
(4) EEC Standing Committee 89/392
(5) To be specified

	CO-ORDINATION OF NOTIFIED BODIES PPE-Directive 89/686/EEC + amendments RECOMMENDATION FOR USE	CNB/P/09.014 Revision 02 Language: E

Number of pages: 1	Date: *(issue date)* 2009 / 02 / 14	Approval by : Approved on : ☒ Vertical Group *2013-10-10* ☒ Horizontal Committee *2017-11-27* ☒ Standing Committee 2018-07-10 *(date)*
Origin : Vertical Group 9 / Ricotest		

Question related to: Winter Sports Protectors	EN/prEN: EN 1621-1: 2012 & EN 1621-2: 2014	Other:
Annex: Article:	Clause:	

Key words: Impact protectors for use in motorcycling AND skiing

Question:

Considering that no dedicated harmonised standard is currently available for back & limb protectors in winter sports: How to test and certify back & limb protectors intended not only for motorcycle use but also for use in skiing and snowboarding?

Solution:

Testing:

The protector must completely satisfy the requirements of EN 1621-2: 2014 and EN 1621-1: 2012, and in addition to full compliance with the relevant EN 1621 testing requirements being obtained for the mandatory ambient and wet impact conditions, additional impact testing at “- 20°C” and not “- 10°C” should also be carried out. The duration of the conditioning at -20°C shall be a minimum of 24 hours, and the testing shall be done at lab conditions within 5 min from the removal of the sample from the cold chamber.

Certification:

A common certification for use in motorcycling and winter sports is possible. The use of an additional “skier” pictogram can be accepted. The overall classification level claimed shall be based on the lowest impact performance level achieved for any of the pre-conditions during assessment.

Sent to: ☒ members of the VG ☐ other(s) VG ☒ HC (2) ☐ TC (3) ☐ SC (4) ☐ other (5)

(5)

(1) Essential safety requirement
(2) HC = horizontal committee
(3) N° of CEN/TC (Secretary & Chairman)
(4) EEC Standing Committee 89/392
(5) To be specified

	CO-ORDINATION OF NOTIFIED BODIES **PPE-Directive 89/686/EEC + amendments** **RECOMMENDATION FOR USE**	CNB/P/09.015 Revision 01 Language: E

Number of pages: 1	Date: *(issue date)* 2011	Approval by : Approved on :
Origin : NB 0299		☒ Vertical Group *2013/10/10* ☒ Horizontal Committee *2014/12/04* ☒ Standing Committee *2015/09/19*

Question related to: Impact Testing Annex: Article:	EN/prEN: EN 14021: 2003 Clause: 1 and 4.7 Impact Performance	Other:

Key words: EN 14021: 2003 Motorcyclists Stone Shields

Question:

1) Stone shields for persons with a breast / chest girth less than 75 mm are excluded from the standard. Can they be certified based on and marked with EN 14021?

2) The average measured peak force shall be below 27kN at an impact of 10J and using a guard ring 10mm higher than the anvil. Is this requirement demanding a sufficient degree of limited protection by the product?

Solution:

1) Not at present. Certify to the PPE directive.

2) No.
Nearly every material will pass this test. Perhaps a change in the final drafting stage lead to wrong performance values or test conditions (e.g. guard ring higher than anvil?). Also no maximum peak force is required.
Require for safety reasons at least 20 kN and a maximum peak force of 25 kN.

Sent to: ☒ members of the VG ☐ other(s) VG ☒ HC (2) ☐ TC (3) ☒ SC (4) ☐ other (5)

(5)

(1) Essential safety requirement
(2) HC = horizontal committee
(3) N° of CEN/TC (Secretary & Chairman)
(4) EEC Standing Committee 89/392
(5) To be specified

	CO-ORDINATION OF NOTIFIED BODIES **PPE-Directive 89/686/EEC + amendments** **RECOMMENDATION FOR USE**	CNB/P/09.016 Revision 01 Language: E

Number of pages: 1	Date: *(issue date)* 2011	Approval by : Approved on :
Origin : NB 0075 (CTC)		☒ Vertical Group *2013/10/10* ☒ Horizontal Committee *2014/12/04* ☒ Standing Committee *2015/09/19*

Question related to: Design Annex: Article:	EN/prEN: EN 13595-1: 2002 Clause: 1 and 4.7 Impact Performance	Other:

Key words: EN 13595-1: 2002 Motorcyclists Clothing – Zippers / Ventilation Areas

Question:

Several manufacturers present us some garments with ventilated areas closed by zippers (like a pocket but for ventilation)
These zippers can be on zone 2 or 3 regarding to the EN 13595-1: 2002 annex C
Ventilation zippers could be open during riding
How can we consider this items? Can we perform a test on the closed and/or open zipper ?

Solution:

- Perform the zone 2 or 3 requirements on closed zipper: abrasion, cut resistance....

-A warning shall be included in user information to ensure that zippers are closed during riding

Sent to: ☒ members of the VG ☐ other(s) VG ☒ HC (2) ☐ TC (3) ☒ SC (4) ☐ other (5)

(5)

(1) Essential safety requirement
(2) HC = horizontal committee
(3) N° of CEN/TC (Secretary & Chairman)
(4) EEC Standing Committee 89/392
(5) To be specified

	CO-ORDINATION OF NOTIFIED BODIES PPE-Directive 89/686/EEC + amendments RECOMMENDATION FOR USE	CNB/P/09.017 Revision 00 Language: E

Number of pages: 1	Date: *(issue date)* 2013 – 11 - 01	Approval by : Approved on : ☒ Vertical Group *2013-10-10* ☒ Horizontal Committee *2017-11-27* ☒ Standing Committee 2018-07-10 *(date)*
Origin : SATRA (UK)		

Question related to: Marking Annex: Article:	EN/prEN: EN 1621 Parts 1 & 2 Clause: EN 1621-1 Clause 7 and FprEN 1621-2 Clause 6	Other:

Key words: EN 1621-1: 2012 and EN1621-2: 2014

Question:

If a protector achieves performance level 2 impact attenuation after all three conditioning procedures of:

1. Ambient,
2. wet
3. low temperature

But only performance level 1 attenuation after high temperature conditioning

Can it be marked with 2 separate pictograms – one showing only “T-“ and Level 2 the other also showing “T+” but at Level 1?

Solution:

No. It is not acceptable to include two separate (and confusing) pictograms showing different levels, only a single pictogram may be used, see EN 1621-1: 2012 clause 5.4 and / or EN 1621-2: 2014 clause 4.4.

Sent to: ☒ members of the VG ☐ other(s) VG ☒ HC (2) ☐ TC (3) ☐ SC (4) ☐ other (5)

(5)

(1) Essential safety requirement
(2) HC = horizontal committee
(3) N° of CEN/TC (Secretary & Chairman)
(4) EEC Standing Committee 89/392
(5) To be specified

	CO-ORDINATION OF NOTIFIED BODIES **PPE-Directive 89/686/EEC + amendments** **RECOMMENDATION FOR USE**	CNB/P/09.018 Revision 01 Language: E

Number of pages: 1	Date: *(issue date)* 2013 – 11 - 01	Approval by : Approved on : ☒ Vertical Group *2013/10/10* ☒ Horizontal Committee *2014/12/04* ☒ Standing Committee *2015/09/19*
Origin : CEN/TC 162/WG 9 Meeting 04/06/2013		

Question related to: Wet Impact Test After Hydrolytic Ageing	EN/prEN: EN 1621-1 & EN 1621-2	Other:
Annex: Article:	Clause: EN 1621-1 clause 6.3.4.3 & EN 1621-2 clause 5.1.6.2	

Key words: EN 1621-1: 2012 & EN 1621-2: 2014 Wet impact test after hydrolytic

Question:

How should the sample be stored in the sealed bag according to 1621-1 clause 6.3.4.3 and 1621-2 clause 5.1.6.2?

Solution:

The sample should be stored to allow water to drop out within the sealed bag.

Sent to: ☒ members of the VG ☐ other(s) VG ☒ HC (2) ☐ TC (3) ☒ SC (4) ☐ other (5)

(5)

(1) Essential safety requirement
(2) HC = horizontal committee
(3) N° of CEN/TC (Secretary & Chairman)
(4) EEC Standing Committee 89/392
(5) To be specified

	CO-ORDINATION OF NOTIFIED BODIES **PPE-Directive 89/686/EEC + amendments** **RECOMMENDATION FOR USE**	CNB/P/09.019 Revision 01 Language: E

Number of pages: 1	Date: *(issue date)* 2013 – 11 - 01	Approval by : Approved on :
Origin : SATRA (UK)		☒ Vertical Group *2013/10/10* ☒ Horizontal Committee *2014/12/04* ☒ Standing Committee *2015/09/19*

Question related to: Impact Testing Annex: Article:	EN/prEN: EN 16027: 2011 Clause: 5.6 Impact Strength	Other:

Key words: EN 16027: 2011 Protective Goal Keepers Gloves, Impact Strength

Question:

The standard EN 16027: 2011 details the test apparatus required for Impact Strength testing in 5.6.1 and the procedure for this test in clause 5.6.2.

Although clause 5.6.2 details the impact energy that should be used to carry out this assessment, neither the list of apparatus (clause 5.6.1) nor the procedure (clause 5.6.2), specify the weight of the carriage which should be used.

Is it possible to use any weight carriage to carry out this test, providing that the correct drop height has been calculated prior to testing to obtain the impact energy specified in the standard?

Solution:

No. A heavy mass falling a short distance may not produce the same effect as a small mass falling from a greater height.

A carriage weight of 2.5 kg should be used.

Sent to: ☒ members of the VG ☐ other(s) VG ☒ HC (2) ☐ TC (3) ☒ SC (4) ☐ other (5)

(5)

(1) Essential safety requirement
(2) HC = horizontal committee
(3) N° of CEN/TC (Secretary & Chairman)
(4) EEC Standing Committee 89/392
(5) To be specified

	CO-ORDINATION OF NOTIFIED BODIES PPE-Directive 89/686/EEC + amendments RECOMMENDATION FOR USE	CNB/P/09.020 Revision 00 Language: E

Number of pages: 1	Date: *(issue date)* 2013 – 11 - 01	Approval by : Approved on : ☒ Vertical Group *2013-10-10* ☒ Horizontal Committee *2017-11-27* ☒ Standing Committee 2018-07-10 *(date)*
Origin : Vertical Group 9		

Question related to: Innocuousness	EN/prEN: EN 1621-1: 2012 & EN 1621-2: 2014	Other:
Annex: Article:	Clause: EN 1621-1: 2012 clause 5.2 & EN 1621-2: 2014 clause 4.2	

Key words: EN 1621-1: 2012 & EN 1621-2: 2014 Innocuousness

Question:

Is azo dyes testing (according to EN 340: 2003 or EN ISO 13688:2013) for foam or plastic parts of protectors worn above garments or in garment pockets required?

Solution:

No, (because they have no direct contact to the skin).

Sent to: ☒ members of the VG ☐ other(s) VG ☒ HC (2) ☐ TC (3) ☐ SC (4) ☐ other (5)

(5)

(1) Essential safety requirement
(2) HC = horizontal committee
(3) N° of CEN/TC (Secretary & Chairman)
(4) EEC Standing Committee 89/392
(5) To be specified

	CO-ORDINATION OF NOTIFIED BODIES PPE-Directive 89/686/EEC + amendments RECOMMENDATION FOR USE	CNB/P/09.021 Revision 00 Language: E

Number of pages: 1	Date: *(issue date)* 2013 – 11 - 01	Approval by : Approved on : ☒ Vertical Group *2013-10-10* ☒ Horizontal Committee *2017-11-27* ☒ Standing Committee 2018-07-10 *(date)*
Origin : Vertical Group 9		

Question related to: User Information Annex: Article:	EN/prEN: EN 1621-1: 2012 Clause: 8	Other:

Key words: EN 1621-1: 2012 Information by the manufacturer

Question:

The instruction for use shall contain according to clause 8.e.2 the performance of impact attenuation:

1) Is it sufficient if at least the highest (poorest) result according to clause 6.3.4 (ambient, wet, high and low temperature test) is mentioned?
2) Instead of the exact recorded value obtained during type approval, is it acceptable that the manufacturer states at least the minimum requirement value given by the standard for the claimed performance level?

Solution:

1) Yes, because this value (e.g. mean value for wet test) determines the performance level in the marking.
   More results can be given if desired by the manufacturer.
2) No. This would not be acceptable.

Sent to: ☒ members of the VG ☐ other(s) VG ☒ HC (2) ☐ TC (3) ☐ SC (4) ☐ other (5)

(5)

(1) Essential safety requirement
(2) HC = horizontal committee
(3) N° of CEN/TC (Secretary & Chairman)
(4) EEC Standing Committee 89/392
(5) To be specified

	CO-ORDINATION OF NOTIFIED BODIES PPE-Directive 89/686/EEC + amendments RECOMMENDATION FOR USE	CNB/P/09.022 Revision 00 Language: E

Number of pages: 1	Date: *(issue date)* 2016 – 04 - 28	Approval by : Approved on : ☒ Vertical Group *2016-04-28* ☒ Horizontal Committee *2018-02-16* ☒ Standing Committee 2018-07-10 *(date)*
Origin : Vertical Group 9		

Question related to: Tear Strength	EN/prEN: EN 13594: 2015	Other:
Annex: Article:	Clause: 4.6	

Key words: Tear Testing, Determination of Pass / Fail, Protective Overlays

Question:

EN 13594: 2015 requires 3 samples of each material type used in the protective layer to be tested for tear, and that the lowest result on a single test piece shall comply with the performance requirements.

1) The current wording suggests that each material type / layer of materials that forms the protective layer must be tested individually. Is this correct?
2) The current wording suggests that each individual material type / layer of materials that forms the protective layer must meet the requirements of EN 13594: 2015. Is this correct?
3) If protective overlay patches are present on the palm and back of the hand, how should one test and evaluate the tear resistance level according to EN 13594: 2015

Solution:

1 & 2) Each of the three samples required for tear testing shall be taken through the full thickness of the protective layer to include each of the materials found within the protective layer, and all layers are to be tested together. The lowest result on a single test piece shall comply with the performance requirements.

3) In cases where reinforcement and / or protective overlay patches are present, the results obtained on the weakest parts of the structure should be considered.

Sent to: ☒ members of the VG ☐ other(s) VG ☒ HC (2) ☐ TC (3) ☐ SC (4) ☐ other (5)

(5)

(1) Essential safety requirement
(2) HC = horizontal committee
(3) N° of CEN/TC (Secretary & Chairman)
(4) EEC Standing Committee 89/392
(5) To be specified

	CO-ORDINATION OF NOTIFIED BODIES PPE-Directive 89/686/EEC + amendments RECOMMENDATION FOR USE	CNB/P/09.023 Revision 00 Language: E

Number of pages: 1	Date: 2017-07-13	Approval by : Approved on : ☒ Vertical Group .....2017-07-13 ☒ Horizontal Committee.....2018-02-16 ☐ Standing Committee..... 2018-07-10
Origin: Vertical Group 9		

Question related to: Motorcyclists limb protectors Annex: II Article:	EN/prEN: 1621-1: 2012 Clause: 5.3 and 6.3	Other:

Key words: impact protectors with ergonomic gaps

Question:

Limb protectors containing ergonomic gaps within the template area for ergonomic reasons can comply with EN 1621-1 clause 5.3 and 6.3. The manufacturer has to state in his instructions for use that these gaps need to be closed when the protector is used (e.g. form a 3-dimensional shape).

1) Should the manufacturer´s information contains a warning that full impact protection is only available if the ergonomic gaps of the protectors are closed?

Solution:

1) yes; warning is important for safety reasons.

Sent to: ☒ members of the VG ☐ other(s) VG ☒ HC (2) ☐ TC (3) ☐ SC (4) ☐ other (5)

(3): (5):

(1) Essential safety requirement
(2) HC = horizontal committee
(3) N° of CEN/TC (Secretary & Chairman)
(4) EEC Standing Committee 89/392
(5) To be specified

	CO-ORDINATION OF NOTIFIED BODIES PPE-Directive 89/686/EEC + amendments RECOMMENDATION FOR USE	CNB/P/09.024 Revision 00 Language: E

Number of pages: 1	Date: 2017-07-13	Approval by : Approved on : ☒ Vertical Group .....2017-07-13 ☒ Horizontal Committee.....2018-02-16 ☐ Standing Committee.....2018-07-10
Origin: Vertical Group 9		

Question related to: Motorcyclists limb protectors Annex: II Article:	EN/prEN: 1621-2: 2014 Clause: 4.6 Sizing	Other:

Key words: Motorcyclists back protector sizing intervals

Question:

Question: EN 1621-2: 2014 clause 4.6 Sizing, states “The waist to shoulder length, expressed in centimetres shall be specified as a range up to max. 5cm.”

Should this maximum 5cm range be the number of centimetres between the minimum and maximum value claimed (e.g 45 – 50cm) OR should this maximum 5cm include both the maximum and minimum values (e.g 45 – 49cm)?

Solution:

Providing that there is an ‘overlap’ in the sizing across the range of available sizes (for example Size S = 45 – 50cm, Size M = 50 – 55cm) it would be considered acceptable for the 5cm range to be the number of centimetres between the maximum and minimum value claimed. However, if no ‘overlap’ in values is present or only a single size of protector is available, (for example Size S = 45 – 50cm, Size M = 51 – 56cm) the 5cm range should include both the minimum and maximum value claimed..

Sent to: ☒ members of the VG ☐ other(s) VG ☒ HC (2) ☐ TC (3) ☐ SC (4) ☐ other (5)

(3): (5):

(1) Essential safety requirement
(2) HC = horizontal committee
(3) N° of CEN/TC (Secretary & Chairman)
(4) EEC Standing Committee 89/392
(5) To be specified

Vertical Recommendation for Use sheets (RfUs)
of Vertical Group 10 "Foot and Leg Protection"
of the European Coordination of Notified Bodies in the field of PPE

Number of RfU	Version	Reference	Keywords	Approved by Vertical Group 10	Approved by Horizontal Committee	Approved by PPE Working Group
10.082	02	EN ISO 20345:2011, EN ISO 20346:2014, EN ISO 20347:2012	Obsolescence	25/05/2016	13/10/2016	20/01/2017
10.083	03	EN ISO 20345:2011, EN ISO 20346:2014, EN ISO 20347:2012	Marking of the standard EN ISO 20345:2011	24/05/2013	15/05/2015	03/11/2015
10.087	03	EN ISO 20345:2011	Lining holing	25/05/2016	13/10/2016	20/01/2017
10.088	03	EN ISO 20345:2011, EN ISO 20346:2014, EN ISO 20347:2012	Water Penetration and water absorption - Non-functional and decorative stitching and perforations	24/05/2013	15/05/2015	03/11/2015
10.123	03	EN ISO 20345:2011, EN ISO 20346:2014, EN ISO 20347:2012	Outsole without continuity	18/05/2017	19/03/2018	10/07/2018
10.132	02	EN 15090:2012	Insulation against heat, assessment, deformation	21/10/2015	04/02/2016	06/05/2016
10.144	03	EN ISO 20345:2011, EN ISO 17249:2013	Several standards	01/07/2014	15/05/2015	03/11/2015
10.164	03	EN ISO 20345:2011, EN ISO 20346:2014, EN ISO 20347:2012	Synthetic upper materials on classification I footwear	24/05/2012	15/05/2015	03/11/2015
10.169	02	EN 13634:2010	Design	24/05/2012	15/05/2015	03/11/2015
10.170	02	EN 13287:2012	Curved outsoles	24/05/2012	15/05/2015	03/11/2015
10.171	02	EN ISO 20347:2012	Test duration	24/05/2012	15/05/2015	03/11/2015
10.172	02	EN ISO 20344:2011	Coverage area	24/05/2012	15/05/2015	03/11/2015
10.173	02		Innocuousness / Azo dyes	24/05/2012	15/05/2015	03/11/2015
10.174	02	EN ISO 20345:2011	Dimensions of areas of corrosion	24/05/2012	15/05/2015	03/11/2015
10.175	02	EN ISO 20349:2010	EN ISO 20349:2010	24/05/2012	15/05/2015	03/11/2015
10.176	02	EN ISO 20344:2011	Cotton gauze	24/05/2012	15/05/2015	03/11/2015
10.177	02	EN ISO 20344:2011	Insock, water detection	24/05/2012	15/05/2015	03/11/2015
10.178	03	EN ISO 20349:2010	EN ISO 20349, 5.3 and Annex A Test with molten metal for foundry footwear	24/05/2013	15/05/2015	03/11/2015
10.179	03	EN ISO 20345:2011	Quarter lining; seat region; heel grip	01/07/2014	15/05/2015	03/11/2015
10.180	02	EN ISO 20347:2012	Vamp lining mandatory	24/05/2013	15/05/2015	03/11/2015
10.181	02	EN ISO 13287:2012	Slip resistance	24/05/2013	15/05/2015	03/11/2015
10.182	02		Footwear slip resistance	24/05/2013	15/05/2015	03/11/2015
10.183	02		Overshoe, slip resistance	24/05/2013	15/05/2015	03/11/2015
10.184	02	EN ISO 20345:2011 cl. 6.2.7, EN 13634:2010	Ankle protection, how many areas per shoe	24/05/2013	15/05/2015	03/11/2015

Status: July 2018

Number of RfU	Version	Reference	Keywords	Approved by Vertical Group 10	Approved by Horizontal Committee	Approved by PPE Working Group
10.185	02	EN ISO 20349:2010	EN ISO 20349:2010, Foundry footwear 5.1 and Table 3	24/05/2013	15/05/2015	03/11/2015
10.186	02	EN ISO 20349:2010	Collar, upper in EN ISO 20349:2010	24/05/2013	15/05/2015	03/11/2015
10.187	02		Orthopedics	24/05/2013	15/05/2015	03/11/2015
10.189	02	EN ISO 20345:2011, EN ISO 20347:2012	Quarter lining	01/07/2014	15/05/2015	03/11/2015
10.190	02	EN ISO 20344:2011	Outsole cracking	01/07/2014	15/05/2015	03/11/2015
10.191	02	EN 15090:2012, EN ISO 20345:2011, EN ISO 20349:2010, EN ISO 17249:2013	Incorrect references	01/07/2014	15/05/2015	03/11/2015
10.192	02	EN ISO 20345:2011	Water vapour permeability and coefficient on clog	01/07/2014	15/05/2015	03/11/2015
10.193	02	EN ISO 13287:2012	Slip resistance	05/02/2015	15/05/2015	03/11/2015
10.194	01	EN ISO 20346:2014		21/10/2015	04/02/2016	06/05/2016
10.195	01	EN 13832-1:2006	Stocking, degradation test	21/10/2015	04/02/2016	06/05/2016
10.196	01	EN ISO 20345:2011, EN ISO 20346:2014	Toe cap, cracks	21/10/2015	04/02/2016	06/05/2016
10.197	01	EN ISO 20345: 2011	Water absorption / desorption	21/10/2015	04/02/2016	06/05/2016
10.198	01	EN ISO 20345:2011, EN ISO 20346:2014, EN ISO 20347:2012	Open heel region	21/10/2015	04/02/2016	06/05/2016
10.199	01		Overshoe, slip resistance	25/05/2016	13/10/2016	20/01/2017
10.200	01		Certification of a sandal	25/05/2016	13/10/2016	20/01/2017
10.201	01	EN 15090:2012	Sandbath	25/05/2016	13/10/2016	20/01/2017

Note: Recommendation for Use sheets which deal with withdrawn and / or superseded standards and which no longer apply to new certifications are published as reference for previous files.

	CO-ORDINATION OF NOTIFIED BODIES PPE-Directive 89/686/EEC + amendments RECOMMENDATION FOR USE	CNB/P/10.082 Revision 02 Language: E

Number of pages: 1	Date: 25th May 2016	Approval by : Approved on : ☒ Vertical Group 25/05/2016 ☒ Horizontal Committee 13/10/2016 ☒ Standing Committee 20/01/2017
Origin : France		

Question related to: Footwear – Date of obsolescence	EN/prEN: EN ISO 20345: 2011, EN ISO 20346: 2014 and EN ISO 20347: 2012	Other:
Annex: Article:	Clause: 8	

Key words: Obsolescence

Question:

In the standards EN ISO 20345: 2011, EN ISO 20346: 2014 and EN ISO 20347: 2012 clause 8.1 it is written:
"Safety footwear shall be supplied to the customer with information written at least in the official language(s) of the state of destination. All information shall be unambiguous. The following information shall be given:
7) obsolescence deadline or period of obsolescence"
The obsolescence deadline is difficult to assess by the manufacturer. It is possible to give a limit when the products are stored by the manufacturer himself because he knows the conditions. But, when the products are stored by a retailer or the customer, it is very difficult to give figures.
The problem is more critical with polymeric boots (PU, due to hydrolysis…)
French manufacturers try to define this limit period but they have had information from Italy that it is possible to avoid to answer to this point of the standard with a sentence like : "Due to several factors, humidity, changes in the materials in the time, it is not possible to give a date of obsolescence."
This sentence is not conform to the standard, but conform to the directive.
Does that mean that CE marking is possible but reference to the standard impossible?

Solution:

To avoid inconsistent information, VG 10 proposes to give the following text to help the person that puts the product on the market:

"When stored under normal conditions (light, temperature, and relative humidity), the obsolescence date of a footwear is generally:

- 10 years after the date of manufacturing for shoes with upper leather, rubber and thermoplastic materials (such as SEBS etc) and EVA
- 5 years after the date of manufacturing for shoes including PVC
- 3 years after the date of manufacturing for shoes including PU and TPU

However, these durations are medium values. It is the responsibility of the manufacturer to determine them.
Higher periods of validity can be accepted by the Notified Body if the manufacturer can provide supporting evidence (tests, experience).

Sent to: ☒ members of the VG ☐ other(s) VG ☒ HC (2) ☐ TC (3) ☒ SC (4) ☐ other (5)

(5)

(1) Essential safety requirement
(2) HC = horizontal committee
(3) N° of CEN/TC (Secretary & Chairman)
(4) EEC Standing Committee 89/392
(5) To be specified

	CO-ORDINATION OF NOTIFIED BODIES **PPE-Directive 89/686/EEC + amendments** **RECOMMENDATION FOR USE**	CNB/P/10.083 Revision 03 Language:E

Number of pages: 1	Date: **24/05/2013**	Approval by :	Approved on :
Origin: GERMANY		☑ Vertical Group ☑ Horizontal Committee ☑ Standing Committee	24/05/2013 15/05/2015 03/11/2015

Question related to: Directive 89/686/EEC	EN/prEN: 20345 20346 20347…	Other:
Annex: Article :	Clause :	

Key words: marking of the standard EN ISO 20345:2011

Question:

Which possibilities are allowed to mark safety shoes in accordance to EN ISO 20345: 2011? In the standard there is written: ISO 20345: 2011.

There are - theoretically - 7 alternatives for marking (example UK):

BS 20345:2011	EN 20345:2011	BS ISO 20345:2011
ISO 20345:2011	BS EN 20345:2011	EN ISO 20345:2011
BS EN ISO 20345:2011		

Are there regulations which ones are allowed and which ones not?

Recommended solution :

Reference to BS 20345, EN 20345, BS EN 20345 markings are forbidden. These standards may exist but have no relation with footwear.

ISO 20345:2011, this marking can be used inside or outside Europe, this marking stresses on the international level of the standard.

VG10 advises EN ISO 20345:2011, BS EN ISO 20345:2011 etc with a preference for the first one.

Sent for information to:	☑	members of the VG	☐	other(s) VG	☑	HC (2)
	☑	TC (3)	☑	SC (4)	☐	other (5)

(1) Essential safety requirement
(2) HC = horizontal committee
(3) N° of CEN/TC (Secretary & Chairman)
(4) EEC Standing Committee 89/392
(5) to be specified

	CO-ORDINATION OF NOTIFIED BODIES PPE-Directive 89/686/EEC + amendments RECOMMENDATION FOR USE	CNB/P/10.087 Revision 03 Language: E

Number of pages: 1	Date: 25th May 2016	Approval by : Approved on :
Origin : SATRA / INESCOP / PFI		☒ Vertical Group 25/05/2016 ☒ Horizontal Committee 13/10/2016 ☒ Standing Committee 20/01/2017

Question related to: Abrasion holing	EN/prEN: EN ISO 20345: 2011	Other:
Annex: Article:	Clause:	

Key words: Lining holing

Question:

1. EN ISO 20345: 2011 Clauses 5.5.2 and 5.7.4.2 both include a statement "shall not develop any holes" – What is the definition of a hole? Is a cavity a hole or must the hole extend through the full thickness of the entire specimen?

2. How should a perforated material be treated?

Solution:

1. A hole should only be considered a hole when it extends through the full thickness of the wearing surface
2. Only new holes (ie holes that did not exist before the test) should be considered during the assessment

The various material types shall be considered to fail when:

Membrane lining: There is a hole in the textile layer

Double textile (3D): The outer layer (in contact with the foot) develops a hole

Woven textile: There is a hole or if the threads of one direction break

Knitted textile: There is a hole or the threads of the base network break. If these base threads do not break, it shall not be considered to fail, even if other threads do

Textile with pile: There is a hole in the base textile
Leather: There is a hole through its full thickness
Coated materials: There is a hole through the full thickness of the coating

Sent to: ☒ members of the VG ☐ other(s) VG ☒ HC (2) ☐ TC (3) ☒ SC (4) ☐ other (5)

(5)

(1) Essential safety requirement
(2) HC = horizontal committee
(3) N° of CEN/TC (Secretary & Chairman)
(4) EEC Standing Committee 89/392
(5) To be specified

	CO-ORDINATION OF NOTIFIED BODIES **PPE-Directive 89/686/EEC + amendments** **RECOMMENDATION FOR USE**	CNB/P/10.088 Revision 03 Language: E

Number of pages: 1	Date: : **24th May 2013**	Approval by : ☑ Vertical Group ☑ Horizontal Committee ☑ Standing Committee	Approved on : 24/05/2013 15/05/2015 03/11/2015
Origin: CTC			

Question related to : EN ISO 20345:2011, EN ISO 20346:2014, EN ISO 20347:2012 Article : Clause :6.3.2	EN ISO 20345:2011, EN ISO 20346:2014, EN ISO Clause :	Other :

Key words: Water Penetration and water absorption - Non-functional and decorative stitching and perforations

Question:

1. Do the descriptors “non-functional and decorative” relate to perforations as well as stitching ?

2. Does the requirement for “Non-functional and decorative stitching and perforations not being used” only apply to the areas below the line defined in table 7 of EN ISO 20345:2011 or are such decorative features also prohibited above this line ?

Recommended solution :

1. “non-functional and decorative stitching ”are forbidden to obtain the S2 marking. It is a big problem for the designer. Therefore it is proposed to accept for S2 non-functional and decorative stitching if they are protected with impermeable material or a membrane. In this case, the upper is a complex composed of an outer and inner material (excluding lining).
   The complex upper shall fulfil all the upper requirements in EN ISO 20345: 2011.

2. Yes, decorative features including holes (even if they are not protected by an impermeable material or a membrane see 1.) are permitted above the line defined in table 7.

Sent for information to:	☑	members of the VG	☐	other(s) VG	☑	HC (2)
	☑	TC (3)	☑	SC (4)	☐	other (5)

(1) Essential safety requirement
(2) HC = horizontal committee
(3) N° of CEN/TC (Secretary & Chairman)
(4) EEC Standing Committee 89/392
(5) to be specified

	CO-ORDINATION OF NOTIFIED BODIES PPE-Directive 89/686/EEC + amendments RECOMMENDATION FOR USE	CNB/P/10.123 Revision 03 Language: E

Number of pages: 1	Date: *29 February 2008*	Approval by : / Approved on :
Origin : INESCOP / CTC		☒ Vertical Group *18/05/2017* ☒ Horizontal Committee *19/03/2018* ☐ Standing Committee *(date)* 10/07/2018

Question related to: Annex: Article:	EN/prEN: EN ISO 20345:2011, EN ISO 20346:2014, EN ISO 20347:2012 Clause:	Other:

Key words:

Outsole without continuity

Question:

How should footwear with outsoles consisting of several different materials be assessed when testing to EN ISO 20345: 2011, EN ISO 20346: 2014 and EN ISO 20347: 2012? This may be footwear with one outsole material type covering the forepart, another covering the heel and a different material (such as a cellular material from the midsole) in the waist area. Alternatively, it could be a more intricate outsole design such as shown in the picture below

Solution:

Any construction should be accepted provided that <u>all</u> of the visible (exposed) outsole materials (including those in the waist area or other areas not in direct contact with the ground) comply with the resistance to fuel oil outsole requirements when this is claimed. For all other outsole requirements these shall only be tested on visible (exposed) materials that are not touching the ground where a specimen can be obtained from the footwear sample. (Note: All materials in contact with the ground or for example a ladder rung shall be fully tested)

Sent to: ☒ members of the VG ☐ other(s) VG ☒ HC (2) ☐ TC (3) ☐ SC (4) ☐ other (5)

(5)

(1) Essential safety requirement
(2) HC = horizontal committee
(3) N° of CEN/TC (Secretary & Chairman)
(4) EEC Standing Committee 89/392
(5) To be specified

	CO-ORDINATION OF NOTIFIED BODIES **PPE-Directive 89/686/EEC + amendments** **RECOMMENDATION FOR USE**	CNB/R/10.132 Revision 2 Language: E

Number of pages : 1	Date : 27 January 2009	Approval by :	Approved on :
Origin : INESCOP		☒ Vertical Group..... ☒ Horizontal Committee ..... ☒ Standing Committee	21/10/2015 04/02/2016 06/05/2016

Question related to : Insulation against heat. EN 15090: 2012		Other :
Annex :	Article	

Key words : Assessment, deformation

Sometimes during the test the outsole swells significantly modifying the area in contact with the hot plate. When the test is finished there are two possibilities:

- When the outsole cools down the swelling disappears.
- When the outsole cools down the swelling remains there, but maybe reduced.

The question is how to assess the test itself - The swelling impedes the normal contact (heat transfer) between the plate and the footwear so is swelling acceptable whilst in the sandbath?

Also are signs of melting acceptable?

Recommended solution :

If the vertical position of any part of the footwear upper increases by more than 10 mm during the test this is a sign that the contact area with the hotplate could have been affected (reduced) and the footwear will be considered to have failed.

Alternatively, a frame (or similar mechanism) could be placed over the boot to hold it in place during the test. The frame should not be applying a downward force to the boot at the start of the test but would restrict any upwards movement during the test. This way, any potential “swelling” during testing could be prevented, as well as the resulting loss of contact of the outsole with test surface.

Either way signs of material melting should be considered as a sign of non-compliance

Sent to: ☒ members of the VG ☐ other(s) VG ☒ HC (2) ☐ TC (3) ☒ SC (4) ☐ other (5)

(5)

(1) Essential safety requirement
(2) HC = horizontal committee
(3) N° of CEN/TC (Secretary & Chairman)
(4) EEC Standing Committee 89/392
(5) To be specified

	CO-ORDINATION OF NOTIFIED BODIES **PPE-Directive 89/686/EEC + amendments** **RECOMMENDATION FOR USE**	**CNB/P/10.144** Revision 03 Language: E

Number of pages: 1	Date: 1st July 2014	Approval by : Approved on :
Origin : TÜV		☑ Vertical Group 01/07/2014 ☑ Horizontal Committee 15/05/2015 ☑ Standing Committee 03/11/2015

Question related to: Marking Annex: Article:	EN ISO 20345: 2011 & EN ISO 17249: 2013 Clause:	Other:

Key words: several standards

Question:

One of our customers wants to mark his products with 2 standards e.g. EN ISO 20345: 2011 and EN ISO 17249: 2013.
Is it possible, if both standards are completely fulfilled? Or should be mentioned the chain saw cut protection only as an additional protection with marking the pictogram and performance level?

Solution:

It was agreed that where a product fully satisfied the requirements of two (or more) standards, the number of all these standard can (if desired) be marked on the product. However, this must be done in a way that is not confusing for the user and in the example given, it would only be necessary to mark the footwear EN ISO 17249: 2013.

Also marking codes cannot be used unless accompanied by the number of the standard that includes the reference to this particular code. For instance it is not possible to mark “EN ISO 17249: 2013 S3” as EN ISO 17249: 2013 does not include mention of the code S3. Hence, would need to mark “EN ISO 17249: 2013 + level and EN ISO 20345: 2011 S3” provided, of course, that all relevant testing requirements were met.

See also horizontal group RfU sheet number 51 covered this subject explaining that pictograms can be used without reference to standards but if performance classes or codes of protection are also to be included then the standard must be completely fulfilled and its number also marked on the product.

Sent to: ☒ members of the VG ☐ other(s) VG ☒ HC (2) ☒ TC (3) ☒ SC (4) ☐ other (5)

(5)

(1) Essential safety requirement
(2) HC = horizontal committee
(3) CEN/TC 161/WG1&2 (Secretary & Chairman)
(4) EEC Standing Committee 89/392
(5) To be specified

	CO-ORDINATION OF NOTIFIED BODIES **PPE-Directive 89/686/EEC + amendments** **RECOMMENDATION FOR USE**	CNB/P/10.164 Revision 03 Language: E

Number of pages: 1	Date: 26th September 2011	Approval by :	Approved on :
Origin : CTC		☑ Vertical Group ☑ Horizontal Committee ☑ Standing Committee	24/05/2012 15/05/2015 03/11/2015

Question related to: Annex: Article:	EN/prEN: EN ISO 20345:2011, EN ISO 20346:2014, EN ISO 20347: 2012 Clause:	Other:

Key words:

Synthetic upper materials on classification I footwear

Question:

Class I footwear models with synthetic material on upper which are used as decorative component or for design (PU, reflective tape...) are widespread. This kind of material is usually used for small surfaces : see orange and black components on pictures for example

Regarding to the EN ISO 20345: 2011 standard (§5.4) these components must be tested as upper components but the water vapour coefficient and permeability is not conform because of the component quality

Is it possible to certify these models to EN ISO : 2011 classification I ?

Solution:

Certification in class I is possible provided that the overlay components (that do not meet the water vapour coefficient and permeability requirements):

1. For Design A - Account for no more than 40% of the whole area of the upper (excluding the collar) – see # below
2. For Designs B, C or D - Account for no more than 10% of the whole area of the upper (excluding the toe cap, counter and collar)
3. Always cover an upper material that is fully compliant with EN ISO 20345/6/7

(Point 3 does not apply to materials covering the toe cap and the counter)

For information, note that that in general for design A footwear the toe cap and counter areas typically account for around 30% of the total upper area

Sent to: ☒ members of the VG ☐ other(s) VG ☒ HC (2) ☐ TC (3) ☒ SC (4) ☐ other (5)

(5)

(1) Essential safety requirement
(2) HC = horizontal committee
(3) N° of CEN/TC (Secretary & Chairman)
(4) EEC Standing Committee 89/392
(5) To be specified

	CO-ORDINATION OF NOTIFIED BODIES **PPE-Directive 89/686/EEC + amendments** **RECOMMENDATION FOR USE**	CNB/R/10.169 Revision 02 Language: E

Number of pages: 1	Date: 24th May 2012	Approval by : Approved on : ☒ Vertical Group 24/05/2012 ☒ Horizontal Committee 15/05/2015 ☒ Standing Committee 03/11/2015
Origin : CTC		

Question related to: Motorcycle boots	EN 13634: 2010	Other:
Annex: Article:	Clause:	

Key words: Design

Question:

Below you will see a model with a fastening system by velcro on the external side of the footwear.

During an accident, the fastening system can be pulled out and maybe the footwear will leave the foot. Is this fastening construction acceptable ?

Solution:

To minimise this risk and be acceptable the opening of fastening should not be in Area B as defined by figure 2 of EN 13634: 2010.

Sent to: ☒ members of the VG ☒ other(s) VG ☒ HC (2) ☐ TC (3) ☒ SC (4) ☐ other (5)

(5)

(1) Essential safety requirement
(2) HC = horizontal committee
(3) N° of CEN/TC (Secretary & Chairman)
(4) EEC Standing Committee 89/392
(5) To be specified

	CO-ORDINATION OF NOTIFIED BODIES **PPE-Directive 89/686/EEC + amendments** **RECOMMENDATION FOR USE**	CNB/R/10.170 Revision 02 Language: E

Number of pages: 2	Date: 24th May 2012	Approval by : Approved on : ☒ Vertical Group 24/05/2012 ☒ Horizontal Committee 15/05/2015 ☒ Standing Committee 03/11/2015
Origin : TUV		

Question related to: Slip resistance Annex: Article:	EN/prEN: EN 13287:2012 Clause:	Other:

Key words: Curved outsoles

Question:

How best to carry out slip resistance testing of samples with curved outsoles?

Solution

One possible solution (which is dependent on design of the machine) is to adjust the 7 °angle on the testing device for the heel mode based on this central vertex without using the wedge – see photographs below

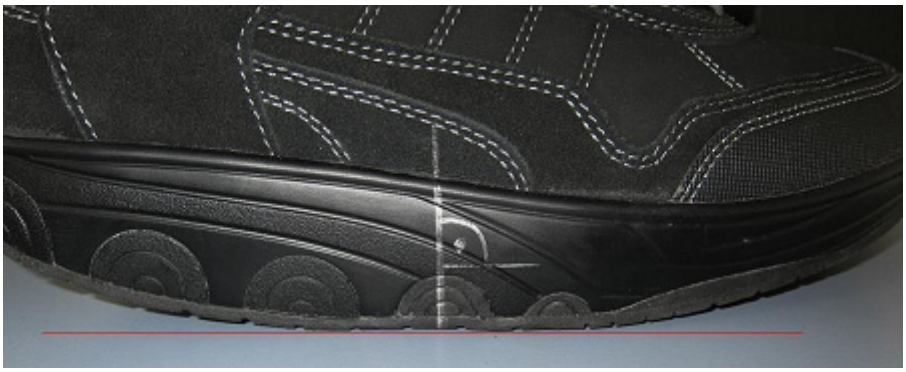

(1) Essential safety requirement
(2) HC = horizontal committee
(3) N° of CEN/TC (Secretary & Chairman)
(4) EEC Standing Committee 89/392
(5) To be specified

Sent to: ☒ members of the VG ☒ other(s) VG ☒ HC (2) ☐ TC (3) ☒ SC (4) ☐ other (5)

(5)

	CO-ORDINATION OF NOTIFIED BODIES **PPE-Directive 89/686/EEC + amendments** **RECOMMENDATION FOR USE**	CNB/R/10.171 Revision 02 Language: E

Number of pages: 1	Date: 24th May 2012	Approval by : Approved on : ☒ Vertical Group 24/05/2012 ☒ Horizontal Committee 15/05/2015 ☒ Standing Committee 03/11/2015
Origin : TUV / PFI / INESCOP		

Question related to: Water resistance test duration Annex: Article:	EN/prEN: EN ISO 20347: 2012 Clause: 6.2.5	Other:

Key words: Test duration

Question:

It says in clause 6.2.5 of EN ISO 20347: 2012 that the requirement for Water resistance according to EN ISO 20344, 5.15.2 is 3 cm^2 after 15 minutes. But this is different to that stated in EN ISO 20344: 2011 and EN ISO 20345: 2011 as follows:

EN ISO 20344: 2011 Clause 5.15.2.4.8 states 80 minutes

EN ISO 20345: 2011 Clause 6.2.5 states 80 minutes

EN ISO 20347: 2012 Clause 6.2.5 states 15 minutes

With regard toEN ISO 20347: 2012 Clause 6.2.5 what is the recommended way to proceed for notified bodies against this background?

Solution:

Notified bodies should take the 80 minutes, as it says in EN ISO 20345: 2011.

Sent to: ☒ members of the VG ☐ other(s) VG ☒ HC (2) ☐ TC (3) ☒ SC (4) ☐ other (5)

(5)

(1) Essential safety requirement
(2) HC = horizontal committee
(3) N° of CEN/TC (Secretary & Chairman)
(4) EEC Standing Committee 89/392
(5) To be specified

	CO-ORDINATION OF NOTIFIED BODIES **PPE-Directive 89/686/EEC + amendments** **RECOMMENDATION FOR USE**	CNB/R/10.172 Revision 02 Language: E

Number of pages: 1	Date: 24th May 2012	Approval by : Approved on : ☒ Vertical Group 24/05/2012 ☒ Horizontal Committee 15/05/2015 ☒ Standing Committee 03/11/2015
Origin : CIOP-PIB		

Question related to: Penetration resistant inserts dimensions	EN/prEN: EN ISO 20344: 2011	Other:
Annex: Article:	Clause: 5.8.1	

Key words: Coverage area

Question: According to clause. 5.8.1 of EN ISO 20344:2011 "Section the footwear and measure the distances X and Y being the distances between the edge of the insert and the line left by the feather edge of the last....." (figure below)

The questions are:

- 1. In which places shall the footwear be cut?
- 2. How many cuts shall be made?
- 3. How many measurements of distance X and Y shall be made?

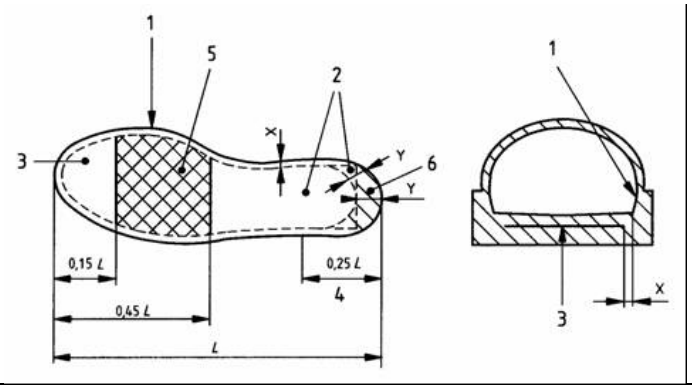

Solution:

It should be noted that the requirement applies to the whole perimeter of the insert but at least the following four points should be checked by cutting into the sample:

1. The footwear shall be cut at - The heel; The forepart; The waist and The toe cap area
2. Four – please see answer 1 above
3. Three of X and one of Y

Sent to: ☒ members of the VG ☐ other(s) VG ☒ HC (2) ☐ TC (3) ☒ SC (4) ☐ other (5)

(5)

(1) Essential safety requirement
(2) HC = horizontal committee
(3) N° of CEN/TC (Secretary & Chairman)
(4) EEC Standing Committee 89/392
(5) To be specified

	CO-ORDINATION OF NOTIFIED BODIES **PPE-Directive 89/686/EEC + amendments** **RECOMMENDATION FOR USE**	CNB/R/10.173 Revision 02 Language: E

Number of pages: 1	Date: 24th May 2012	Approval by : Approved on : ☒ Vertical Group 24/05/2012 ☒ Horizontal Committee 15/05/2015 ☒ Standing Committee 03/11/2015
Origin : CIOP-PIB		

Question related to: Innocuousness AZO Dyes Annex: Article:	EN/prEN: Clause:	Other:

Key words: Innocuousness / Azo dyes

Question:

For which materials in footwear should the Notified Body require the test reports proving that the content of azo dyes listed in the directive 2002/61/EC is in accordance with the requirements?

Solution:

It should be noted that the PPE Directive 89/686 does not differentiate between materials likely to come into skin contact and those not likely. However, as a minimum, all materials present on the inner surface of the footwear should be assessed. Consideration should also be given to all other hazardous substances listed in Annex 17 of REACH.

Sent to: ☒ members of the VG ☐ other(s) VG ☒ HC (2) ☐ TC (3) ☒ SC (4) ☐ other (5)

(5)

(1) Essential safety requirement
(2) HC = horizontal committee
(3) N° of CEN/TC (Secretary & Chairman)
(4) EEC Standing Committee 89/392
(5) To be specified

	CO-ORDINATION OF NOTIFIED BODIES **PPE-Directive 89/686/EEC + amendments** **RECOMMENDATION FOR USE**	CNB/R/10.174 Revision 02 Language: E

Number of pages: 1	Date: 24th May 2012	Approval by : Approved on : ☒ Vertical Group 24/05/2012 ☒ Horizontal Committee 15/05/2015 ☒ Standing Committee 03/11/2015
Origin : INESCOP		

Question related to: Corrosion resistance	EN/prEN: EN ISO 20345	Other:
Annex: Article:	Clause: 6.2.1.5.1	

Key words: Dimensions of areas of corrosion

Question:

For corrosion resistance in Class I, EN ISO 20344: 2011, 5.6.3. refers to EN 12568:2010, 7.3, where the corrosion areas are described by its longest dimension. However the requirement in EN ISO 20345:2011, 6.2.1.5.1 and EN ISO 20347:2012, 6.2.1.5.1 is a maximum area of 2.5 mm2, which is not coherent with the test method. Which requirement should notified bodies follow?

Solution:

The coherent requirement for corrosion resistance of inserts in Class I is a maximum dimension of 2 mm, which is the requirement in EN 12568:2010, 6.3.2 for inserts and in EN ISO 20345:2011, 5.3.2.5.1 for toe caps

Sent to: ☒ members of the VG ☒ other(s) VG ☒ HC (2) ☐ TC (3) ☒ SC (4) ☐ other (5)

(5)

(1) Essential safety requirement
(2) HC = horizontal committee
(3) N° of CEN/TC (Secretary & Chairman)
(4) EEC Standing Committee 89/392
(5) To be specified

	CO-ORDINATION OF NOTIFIED BODIES **PPE-Directive 89/686/EEC + amendments** **RECOMMENDATION FOR USE**	CNB/R/10.175 Revision 02 Language: E

Number of pages: 1	Date: 24th May 2012	Approval by : Approved on : ☒ Vertical Group 24/05/2012 ☒ Horizontal Committee 15/05/2015 ☒ Standing Committee 03/11/2015
Origin : INESCOP		

Question related to: Removal time Annex: Article:	EN/prEN: EN ISO 20349:2010 Clause: Annex B.2.4	Other:

Key words:

Question:

In EN ISO 20349: 2010 Clause 5.2 it states that the removal time shall be <5 s, whilst in B.2.4 it says 5 s. This means that a result of exactly 5 seconds would pass one clause but fail the other.

Also it is not clear in the standard that this time should apply to a single boot rather than a pair.

What is the recommended way to proceed for notified bodies against this background?

Solution:

Accept 5 seconds for one boot (ie not a pair) as a pass result.

Sent to: ☒ members of the VG ☐ other(s) VG ☒ HC (2) ☐ TC (3) ☒ SC (4) ☐ other (5) (5)

(1) Essential safety requirement
(2) HC = horizontal committee
(3) N° of CEN/TC (Secretary & Chairman)
(4) EEC Standing Committee 89/392
(5) To be specified

	CO-ORDINATION OF NOTIFIED BODIES **PPE-Directive 89/686/EEC + amendments** **RECOMMENDATION FOR USE**	CNB/R/10.176 Revision 02 Language: E

Number of pages: 1	Date: 24th May 2012	Approval by : Approved on : ☒ Vertical Group 24/05/2012 ☒ Horizontal Committee 15/05/2015 ☒ Standing Committee 03/11/2015
Origin : INESCOP		

Question related to: Water absorption / desorption Annex: Article:	EN/prEN: EN ISO 20344: 2011 Clause: 7.2.2.2	Other:

Key words: Cotton gauze

Question:

Notified bodies are experiencing some difficulties in finding a cotton/polyamide (50/50) gauze conforming with the standard. Three standards that use this method (IUP-11 (heavy leather), EN 12746: 2000 (insoles/insocks) and EN ISO 5404 : 2011(heavy leather)) just mention “cotton gauze”. However, EN ISO 20344 states that a cotton gauze shall be used, but it then specifies that a cotton gauze consisting of cotton and polyamide is required.

What is the recommended way to proceed for notified bodies against this background?

Solution:

The gauze is used to distribute water evenly and its composition is not critical. This is why no standard defines the gauze in a very precise way.

Hence use a cotton gauze that is only made of cotton. This should have a mass/ unit area of 60.5 g/m^2 (as stated in the standard but with the tolerance increased to ± 10 g/m^2) – this is readily available.

Sent to: ☒ members of the VG ☐ other(s) VG ☒ HC (2) ☐ TC (3) ☒ SC (4) ☐ other (5)

(5)

(1) Essential safety requirement
(2) HC = horizontal committee
(3) N° of CEN/TC (Secretary & Chairman)
(4) EEC Standing Committee 89/392
(5) To be specified

	CO-ORDINATION OF NOTIFIED BODIES **PPE-Directive 89/686/EEC + amendments** **RECOMMENDATION FOR USE**	CNB/R/10.177 Revision 02 Language: E

Number of pages: 1	Date: 24th May 2012	Approval by : Approved on : ☒ Vertical Group 24/05/2012 ☒ Horizontal Committee 15/05/2015 ☒ Standing Committee 03/11/2015
Origin : INESCOP		

Question related to: Water resistance Annex: Article:	EN/prEN: EN ISO 20344: 2011 Clause: 5.15	Other:

Key words: Insock, water detection

Question:

Sometimes, especially when the footwear incorporates a membrane lining, water penetration can only be detected if the insock is removed. Water makes the insole wet, but it does not penetrate to the upper side of the insock, which could prevent water penetration from being detected. What should be done?

Solution:

On finishing the test, the insock shall be removed to visually inspect the area for dampness and determine if the footwear complies with the requirement.

Sent to: ☒ members of the VG ☐ other(s) VG ☒ HC (2) ☐ TC (3) ☒ SC (4) ☐ other (5)

(5)

(1) Essential safety requirement
(2) HC = horizontal committee
(3) N° of CEN/TC (Secretary & Chairman)
(4) EEC Standing Committee 89/392
(5) To be specified

	CO-ORDINATION OF NOTIFIED BODIES **PPE-Directive 89/686/EEC + amendments** **RECOMMENDATION FOR USE**	CNB/R/10.178 Revision 03 Language: E

Number of pages: 1	Date: 24th May 2013	Approval by : Approved on : ☒ Vertical Group 24/05/2013 ☒ Horizontal Committee 15/05/2015 ☒ Standing Committee 03/11/2015
Origin : PFI		

Question related to: Molten Metal testing	EN/prEN: EN ISO 20349: 2010	Other:
Annex: Article:	Clause:	

Key words: : EN ISO 20349 , 5.3 and Annex A Test with molten metal for foundry footwear

Question:

The performance of the test as described in Annex A of EN ISO 20349 is not workable as follows:

1) Due to cutting of the shoe A.4 the stability of the test sample is destroyed and the test is difficult because the shrinkage of the leather can lead to contact of the molten metal with inner parts without penetration

2) Picture A1 with the dimensions is not clear. If you position the shoe at 40 mm distance from the end of the chute especially with molten iron the contact is far away from the marking A.5 in reality the place of the contact is hidden by the trousers.

3) The procedure in A.6 especially after end of pouring is not possible it is not possible to check the penetration within 10 s after the end of pouring

What should be done?

Solution:

1) Test must to be carried out on completed footwear (more reality) for more stability. Also permit thin slivers of aluminium to lodge on the footwear during the test provided that they easily fall off after the test (ie they are not stuck to the boot)

2) Define an area where the molten metal should contact the footwear (This should be 30 mm above the marked point as defined by clause A.5 of EN ISO 20349: 2010) the distance of the sample footwear to the chute should be position in that manner

3) The sample should be quenched (interrupting of burning contact with molten metal) at 10 s after pouring, and the inspection of the inner part should be done after cooling

Sent to: ☒ members of the VG ☐ other(s) VG ☒ HC (2) ☐ TC (3) ☒ SC (4) ☐ other (5)

(5)

(1) Essential safety requirement
(2) HC = horizontal committee
(3) N° of CEN/TC (Secretary & Chairman)
(4) EEC Standing Committee 89/392
(5) To be specified

	CO-ORDINATION OF NOTIFIED BODIES **PPE-Directive 89/686/EEC + amendments** **RECOMMENDATION FOR USE**	CNB/P/10.179 Revision 03 Language: E

Number of pages: 1	Date: 1st July 2014	Approval by : Approved on : ☒ Vertical Group 01/07/2014 ☒ Horizontal Committee 15/05/2015 ☒ Standing Committee 03/11/2015
Origin : CTC France & IFA Germany		

Question related to: Abrasion resistance of quarter lining Annex: Article:	EN/prEN: EN ISO 20345 Clause:	Other:

Key words:

Quarter lining ; seat region ; heel grip

Question:

According the clause 3.13 of EN ISO 20345 : 2011 the definition of "**seat region counter area**" is : rear 10 % of the total length of the footwear (upper and sole)

According to 5.5.2 of EN ISO 20345 : 2011 the abrasion resistance of seat region lining must be 51 200 cycles when dry and 25 600 cycles when wet

A lot of models are manufactured with a quarter lining (1) and a heel grip (2)

What material(s) should be tested with 51 200 and 25 600 cycles ?

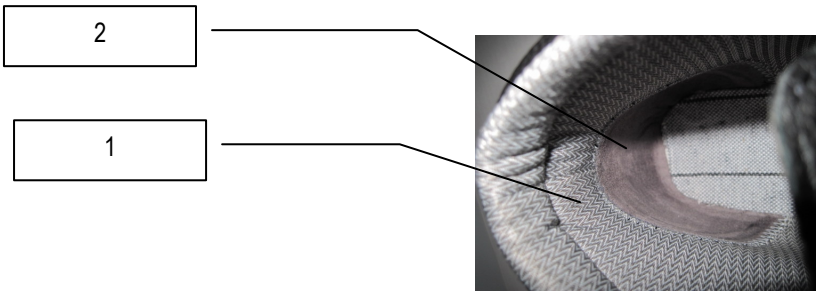

Solution:

The counter (heel) area is defined by the rear 10% of the total length of the footwear (upper and sole). For the purpose of this solution the height of seat region shall be in accordance with the values given in EN ISO 20345 table 10 design A column as measured from the lowest point on the insole/insock (see below). All materials in this area must fulfil 52.600 dry cycles and 25.600 wet cycles of abrasion. For materials outside this defined area 25.600 dry cycles and 12.800 wet cycles of abrasion are applicable

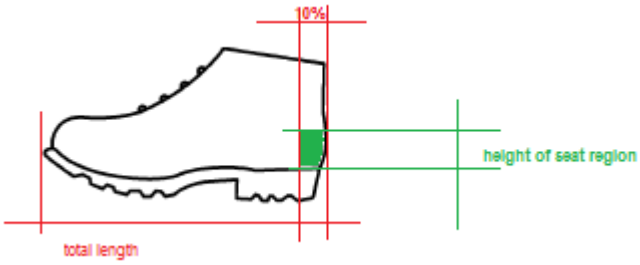

Sent to: ☒ members of the VG ☐ other(s) VG ☒ HC (2) ☐ TC (3) ☒ SC (4) ☐ other (5)

(5)

(1) Essential safety requirement
(2) HC = horizontal committee
(3) N° of CEN/TC (Secretary & Chairman)
(4) EEC Standing Committee 89/392
(5) To be specified

	CO-ORDINATION OF NOTIFIED BODIES **PPE-Directive 89/686/EEC + amendments** **RECOMMENDATION FOR USE**	CNB/P/10.180 Revision 02 Language: E

Number of pages: 1	Date: *24th May 2013*	Approval by : Approved on : ☒ Vertical Group 24/05/2013 ☒ Horizontal Committee 15/05/2015 ☒ Standing Committee 03/11/2015
Origin : Inescop		

Question related to: Certification Annex: Article:	EN/prEN: 20347: 2012 Clause:	Other:

Key words: Vamp lining mandatory

Question:

When revising EN 347 it was decided that the vamp lining did not need to be mandatory, since there was no toecap. For that reason in EN ISO 20347:2004 there was an "O" in Table 2.
However when revising the 2004 version there was an "X" for vamp lining in the 2012 version. As it is now it is not possible to mark 20347 not fulfilling the requirements for vamp lining.
What is the recommended way to proceed for notified bodies against this background?

Solution:

Notified bodies should consider the “X” to be an “O”.

Sent to: ☒ members of the VG ☐ other(s) VG ☒ HC (2) ☐ TC (3) ☒ SC (4) ☐ other (5)

(5)

(1) Essential safety requirement
(2) HC = horizontal committee
(3) N° of CEN/TC (Secretary & Chairman)
(4) EEC Standing Committee 89/392
(5) To be specified

	CO-ORDINATION OF NOTIFIED BODIES **PPE-Directive 89/686/EEC + amendments** **RECOMMENDATION FOR USE**	CNB/P/10.181 Revision 02 Language: E

Number of pages: 1	Date: *24th May 2013*	Approval by : Approved on :
Origin : TC161/WG3		☒ Vertical Group 24/05/2013 ☒ Horizontal Committee 15/05/2015 ☒ Standing Committee 03/11/2015

Question related to: EN ISO 13287: 2012	EN/prEN:	Other:
Annex: Article:	Clause: 5 & 6 and Figure E.1	

Key words: Slip resistance

Question:

1. It has been noted that EN13287 now indicates a requirement of 2 conditioning periods of 48 hrs; firstly to condition samples prior to testing (5.2) and secondly after preparation but before testing (7.1.7 re. footwear and 7.2.5 re. flooring), however, this is deemed unnecessary and excessive if alternate appropriate consideration is taken.

2. Figure E.1 does not align precisely with the text in E.4.3; the text in E.4.3 is correct and the figure should be amended.

What is the recommended way to proceed for notified bodies against this background?

Solution:

1. Clauses 7.1.7 and 7.2.5 are identically worded except for the words footwear (7.1.7) and floor (7.2.5) are interchanged. It is recommended that the wording of these clauses should be interpreted as reading:

   Condition the *item of footwear/floor* in accordance with 5.2 prior to the first test. The *item of footwear/floor* will not need to be re-conditioned *following the initial conditioning (5.2) or* between tests (e.g. different test modes or different surfaces) providing it is not removed from the standard test atmosphere. *The footwear/floor however should be allowed approximately 15 minutes to recover following preparation*.

2. Refer to amended figure below:

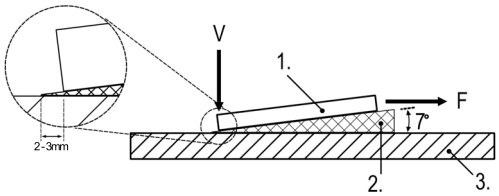

Sent to: ☒ members of the VG ☐ other(s) VG ☒ HC (2) ☐ TC (3) ☒ SC (4) ☐ other (5)

(5)

(1) Essential safety requirement
(2) HC = horizontal committee
(3) N° of CEN/TC (Secretary & Chairman)
(4) EEC Standing Committee 89/392
(5) To be specified

	CO-ORDINATION OF NOTIFIED BODIES **PPE-Directive 89/686/EEC + amendments** **RECOMMENDATION FOR USE**	CNB/P/10.182 Revision 02 Language: E

Number of pages: 1	Date: *24th May 2013*	Approval by : Approved on :
Origin : CIOP-PIB		☒ Vertical Group 24/05/2013 ☒ Horizontal Committee 15/05/2015 ☒ Standing Committee 03/11/2015

Question related to: Annex: Article:	EN/prEN: Clause:	Other:

Key words: Footwear slip resistance

Question:

Should footwear meet the requirement concerning slip resistance?

Solution:

If the manufacturer of such footwear declares its slip resistance as PPE has to be tested and then certified according to the Directive using all relevant BHSR including ergonomics and innocuousness.

If the manufacturer declares meeting the requirements of EN ISO 20347: 2012, the footwear has to be tested and certified according to this standard.

Sent to: ☒ members of the VG ☐ other(s) VG ☒ HC (2) ☐ TC (3) ☒ SC (4) ☐ other (5)

(5)

(1) Essential safety requirement
(2) HC = horizontal committee
(3) N° of CEN/TC (Secretary & Chairman)
(4) EEC Standing Committee 89/392
(5) To be specified

	CO-ORDINATION OF NOTIFIED BODIES **PPE-Directive 89/686/EEC + amendments** **RECOMMENDATION FOR USE**	CNB/P/10.183 Revision 02 Language: E

Number of pages: 1	Date: *24th May 2013*	Approval by : Approved on :
Origin : CIOP-PIB		☒ Vertical Group 24/05/2013 ☒ Horizontal Committee 15/05/2015 ☒ Standing Committee 03/11/2015

Question related to: Overshoes Annex: Article:	EN/prEN: Clause:	Other:

Key words:

Overshoe, slip resistance

Question:

1. Should electrically insulating overshoes (worn over classical footwear) meet the requirement for slip resistance?
2. Can an overshoe or overboot be certified to and marked with EN ISO 20345: 2011; EN ISO 20346: 2014 and EN ISO 20347: 2012?

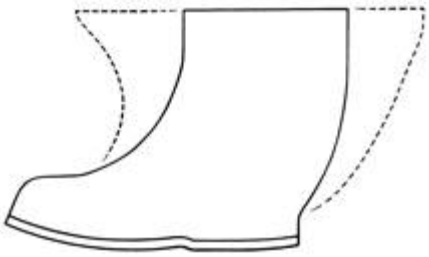

Solution:

1. Yes, this type of footwear shall be tested for slip resistance (unless not required by the risk assessment) but consideration should be given to the interaction between the overshoe and the footwear being worn inside. Also all other relevant BHSR (innocuousness, ergonomics etc) should be addressed.

2. No the scope of the standard does not include this type of product and the standard does not consider the interaction between the overshoe or overboot and the footwear being worn inside. Additionally the performance of any closing system, ergonomics and fitting is not addressed by EN ISO 20345/6/7.

Sent to: ☒ members of the VG ☐ other(s) VG ☒ HC (2) ☐ TC (3) ☒ SC (4) ☐ other (5)

(5)

(1) Essential safety requirement
(2) HC = horizontal committee
(3) N° of CEN/TC (Secretary & Chairman)
(4) EEC Standing Committee 89/392
(5) To be specified

	CO-ORDINATION OF NOTIFIED BODIES **PPE-Directive 89/686/EEC + amendments** **RECOMMENDATION FOR USE**	CNB/P/10.184 Revision 02 Language: E

Number of pages: 1	Date: *24th May 2013*	Approval by : Approved on :
Origin : PFI		☒ Vertical Group 24/05/2013 ☒ Horizontal Committee 15/05/2015 ☒ Standing Committee 03/11/2015

Question related to: EN ISO 20345:2011 cl. 6.2.7 EN13634:2010	EN/prEN:	Other:
Annex: Article:	Clause:	

Key words: Ankle Protection , how many areas per shoe

Question:

1. In EN ISO 20345: 2011 no requirements for the protective area of ankle protection are given.
2. In EN ISO 13634: 2010 the picture seems that the area X is only at the outer side of the footwear.

What is the recommended way to proceed for notified bodies against this background?

Solution:

1. It is defined in EN ISO 20344: 2011 Clause 5.17 that both sides of the ankle (ie inner & outer) of each left & right foot shall be protected and tested.

2. If ankle protection is claimed, protection must be provided (and tested) on both the outer and inner side of both left and right pieces of footwear.

Sent to: ☒ members of the VG ☐ other(s) VG ☒ HC (2) ☐ TC (3) ☒ SC (4) ☐ other (5)

(5)

(1) Essential safety requirement
(2) HC = horizontal committee
(3) N° of CEN/TC (Secretary & Chairman)
(4) EEC Standing Committee 89/392
(5) To be specified

	CO-ORDINATION OF NOTIFIED BODIES **PPE-Directive 89/686/EEC + amendments** **RECOMMENDATION FOR USE**	CNB/P/10.185 Revision 02 Language: E

Number of pages: 2	Date: *24th May 2013*	Approval by : Approved on : ☒ Vertical Group 24/05/2013 ☒ Horizontal Committee 15/05/2015 ☒ Standing Committee 03/11/2015
Origin : PFI		

Question related to: Directive 89/686 Annex: Article:	EN/prEN: Clause:	Other:

Key words: EN ISO 20349: 2010 , Foundry footwear 5.1 and Table 3

Question:

In Table 3 the point row 6 (metal parts) anticipate good solutions for row 7 (close fit to the wearers leg) and fast remove of the shoe (5.2 c) if they are valid all over the shoe upper. Good solutions for a good fitting and fast removability in the highest part of the shoe give fail results in the rows 6 of table 3 but in reality this parts are covered during use by the foundry trousers.

What is the recommended way to proceed for notified bodies against this background?

Solution:

Allow the failing of row 6 of table 4 if the parts are in a part of the shoe where no great danger of metal occurs.

A good solution can be in description of page 2:

Sent to: ☒ members of the VG ☐ other(s) VG ☒ HC (2) ☐ TC (3) ☒ SC (4) ☐ other (5)

(5)

(1) Essential safety requirement
(2) HC = horizontal committee
(3) N° of CEN/TC (Secretary & Chairman)
(4) EEC Standing Committee 89/392
(5) To be specified

Recommended solution :

Allow the failing of row 6 of table 4 if the metal parts are in area A of the shoe

Area A for allowance of metal parts

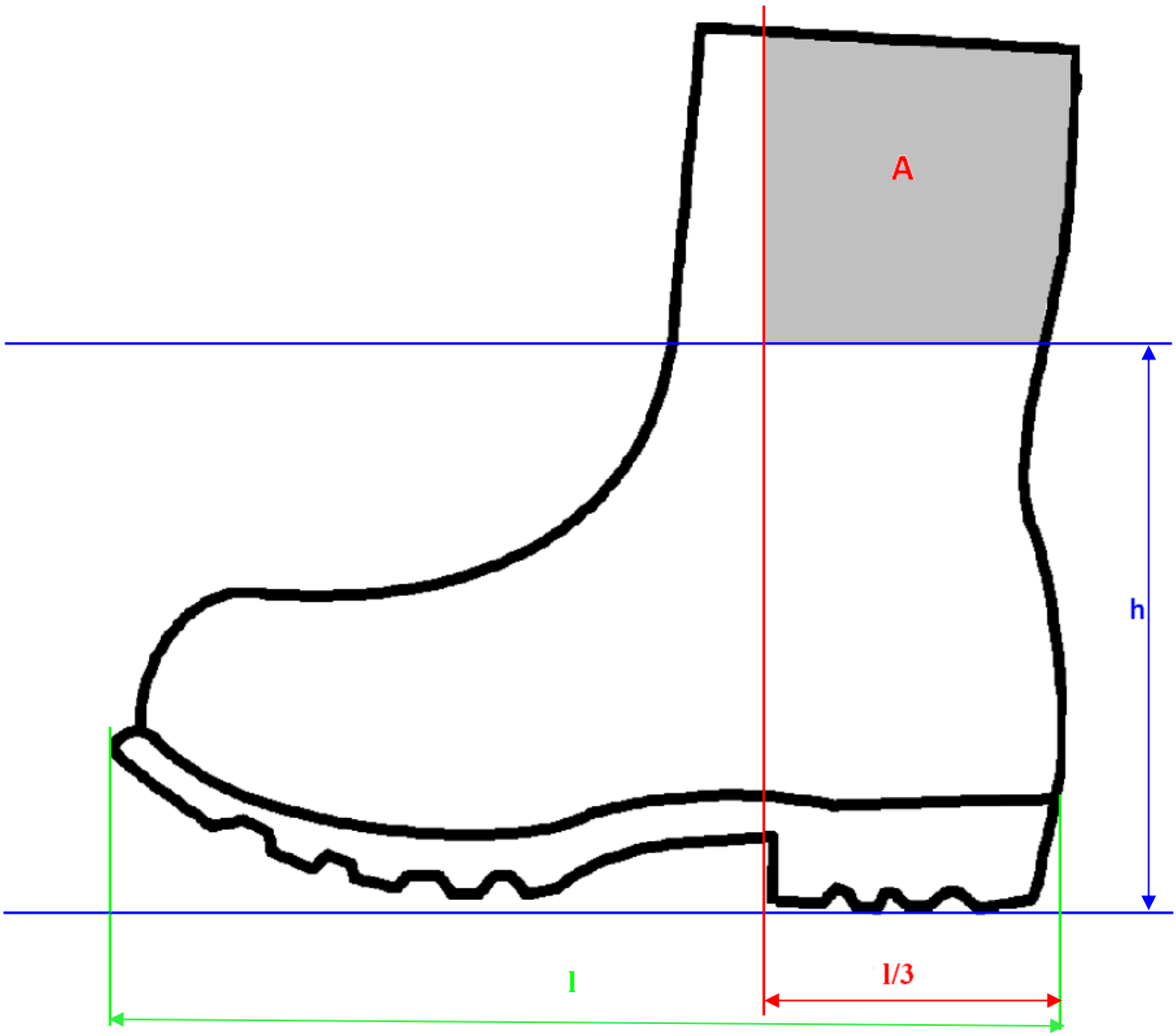

Height h for different sizes:

Size French Stich	Size UK	h (mm)
Up to 36	Up to 3 ½	113
37 and 38	4 to 5	115
39 and 40	5 ½ to 6 ½	119
41 and 42	7 to 8	123
43 and 44	8 ½ to 10	127
45 and larger	10 ½ and larger	131

l = length of shoe

H

	CO-ORDINATION OF NOTIFIED BODIES **PPE-Directive 89/686/EEC + amendments** **RECOMMENDATION FOR USE**	CNB/P/10.186 Revision 02 Language: E

Number of pages: 1	Date: *24th May 2013*	Approval by : Approved on :
Origin : Inescop		☒ Vertical Group 24/05/2013 ☒ Horizontal Committee 15/05/2015 ☒ Standing Committee 03/11/2015

Question related to: Collar Annex: Article:	EN/prEN:	Other:
	Clause:	

Key words: Collar, upper in EN ISO 20349: 2010

Question:

There is a contradiction in Table 2. It makes reference to 5.4.1 for requirements in the upper. This would allow a collar with lower requirements, whilst in the first column it says "Upper (all parts)", meaning that all parts from the upper shall fulfil the requirements.

What is the recommended way to proceed for notified bodies against this background?

Solution:

Do not consider the reference to 5.4.1.

Sent to: ☒ members of the VG ☐ other(s) VG ☒ HC (2) ☐ TC (3) ☒ SC (4) ☐ other (5)

(5)

(1) Essential safety requirement
(2) HC = horizontal committee
(3) N° of CEN/TC (Secretary & Chairman)
(4) EEC Standing Committee 89/392
(5) To be specified

	CO-ORDINATION OF NOTIFIED BODIES **PPE-Directive 89/686/EEC + amendments** **RECOMMENDATION FOR USE**	CNB/P/10.187 Revision 02 Language: E

Number of pages: 2	Date: *24th May 2013*	Approval by : Approved on : ☒ Vertical Group 24/05/2013 ☒ Horizontal Committee 15/05/2015 ☒ Standing Committee 03/11/2015
Origin : TUV		

Question related to: orthopedic changes on safety and occupational footwear Annex: Article:	EN/prEN: Clause:	Other:

Key words: orthopedics

Question:

With reference to EN ISO 20345: 2011 and EN ISO 20347: 2012, which tests are necessary for the assessment of orthopedic change?

Solution:

see annex

Sent to: ☒ members of the VG ☐ other(s) VG ☒ HC (2) ☐ TC (3) ☒ SC (4) ☐ other (5)

(5)

General

(1) Essential safety requirement
(2) HC = horizontal committee
(3) N° of CEN/TC (Secretary & Chairman)
(4) EEC Standing Committee 89/392
(5) To be specified

An industrially manufactured shoe (already certified according to the PPE Directive) shall be customized. This will be done usually by an orthopedic shoemaker according to an assembly instruction. This instruction is part of the technical file for EEC Type Examination. The instruction includes the work flow, materials, all information regarding processing temperature, time and other details. If necessary (for better understanding) pictures or drawings should be added. In addition to the standard the manufacturer must also explain all orthopedic changes of the footwear in the user manual

Required tests (worst case testing)
Safety Footwear according to EN ISO 20345:2011 or EN ISO 20347:2012

parameter	outsole heightening	enlargement of the toe cap	with orthopedic insock	remarks
Basic requirements				
5.3. Whole Footwear				
5.3.2 toe protection	x	x	x	only for safety shoes; without any changes in cleat design; only installation of a material
5.7 Insole/ Insock				
5.7.1 thickness	-	-	x	only if non-removable or insock/insole together
5.7.2 pH value	-	-	x	only for leather
5.7.3 water absorption/ desorption	-	-	x	only if water does not penetrate within 60 s
5.7.4.2 abrasion resistance	-	-	x	
5.7.5 chromium VI	-	-	x	only for leather
5.8 Outsole				
5.8.1.1 thickness of outsoles	x	-	-	
5.8.4 flexing resistance	x	-	-	heightening may affect rigidity;
5.8.6 interlayer bond strength	x	-	-	between outsole and installed material
Additional requirements				
6.2 whole footwear				
6.2.2 electrical properties	x	-	x	
6.2.3 resistance to inimical environments (CI, HI)	x	-	x	worst case measurement (thinnest material structure)
6.2.4 energy absorption	x	-	x	worst case measurement (thinnest material structure)

For handmade orthopaedic footwear all materials, components and constructional assemblies must fulfil the requirements of the harmonised standards. The orthopaedic shoemaker can combine the tested materials, components and constructional assemblies according to the condition of the patient.
If necessary, the test should be carried out analogous for all PPE Footwear testing (e.g. EN 15090: 2012, EN ISO 17249: 2013, EN ISO 20349: 2010 ….)

(1) Essential safety requirement
(2) HC = horizontal committee
(3) N° of CEN/TC (Secretary & Chairman)
(4) EEC Standing Committee 89/392
(5) To be specified

	CO-ORDINATION OF NOTIFIED BODIES **PPE-Directive 89/686/EEC + amendments** **RECOMMENDATION FOR USE**	CNB/P/10.189 Revision 02 Language: E

Number of pages: 1	Date: *1st July 2014*	Approval by :	Approved on :
Origin : IFA-Germany and PZ Haan BG BAU-Germany		☒ Vertical Group 10 ☒ Horizontal Committee ☒ Standing Committee	01/07/2014 15/05/2015 03/11/2015

Question related to: Water vapour permeability (WVP) Annex: Article:	EN/prEN: EN ISO 20345: 2011 and EN ISO 20347: 2012 Clause:	Other:

Key words:Quarter lining

Question:

A quarter lining can consist of more than one material; e.g. quarter lining and heel grip. According to EN ISO 20345: 2011 and EN ISO 20347: 2012 all tests of clauses 5.5.1 up to 5.5.5 are required. Is the test of WVP (Clause 5.5.3) necessary?

Solution:

The test is considered to have no value (hence unnecessary).

No test of WVP is required for materials used in the defined counter area:

Note – Height of defined region to be as given in in the “Design A” column of Table 10 in EN ISO 20345: 2011

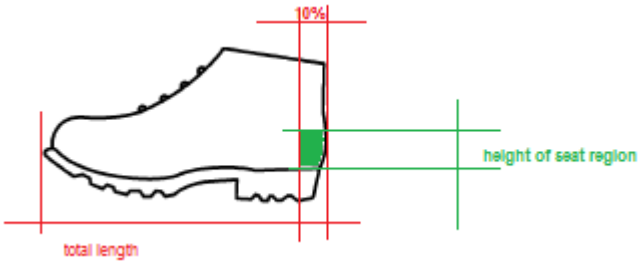

If there is no stiffener or the stiffener is perforated, the material shall comply also WVP.

Sent to: ☒ members of the VG ☐ other(s) VG ☒ HC (2) ☐ TC (3) ☒ SC (4) ☐ other (5)

(5)

(1) Essential safety requirement
(2) HC = horizontal committee
(3) N° of CEN/TC (Secretary & Chairman)
(4) EEC Standing Committee 89/392
(5) To be specified

	CO-ORDINATION OF NOTIFIED BODIES **PPE-Directive 89/686/EEC + amendments** **RECOMMENDATION FOR USE**	CNB/P/10.190 Revision 02 Language: E

Number of pages: 1	Date: *1st July 2014*	Approval by : Approved on :
Origin : IFA Germany		☒ Vertical Group 10 01/07/2014 ☒ Horizontal Committee 15/05/2015 ☒ Standing Committee 03/11/2015

Question related to: EN ISO 20344 : 2011 Annex: B Article:	EN/prEN:	Other:
	Clause:	

Key words:

Outsole cracking

Question:

The figure B.1 in annex B does not correspond to the title: outsole cracks

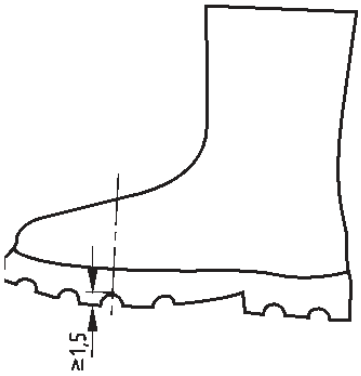

corresponding to cleat height

What is the recommended way to proceed for notified bodies against this background?

Solution:

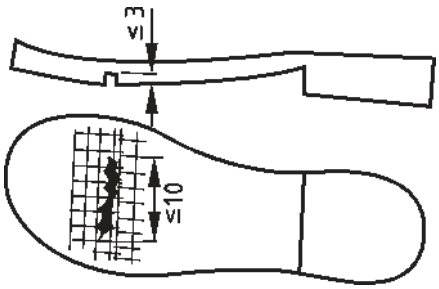

Follow figure corresponding to outsole cracks.

Sent to: ☒ members of the VG ☐ other(s) VG ☒ HC (2) ☐ TC (3) ☒ SC (4) ☐ other (5)

(5)

(1) Essential safety requirement
(2) HC = horizontal committee
(3) N° of CEN/TC (Secretary & Chairman)
(4) EEC Standing Committee 89/392
(5) To be specified

	CO-ORDINATION OF NOTIFIED BODIES **PPE-Directive 89/686/EEC + amendments** **RECOMMENDATION FOR USE**	CNB/P/10.191 Revision 02 Language: E

Number of pages: 1	Date: 1st July 2014	Approval by : Approved on :
Origin : IFA Germany		☒ Vertical Group 01/07/2014 ☒ Horizontal Committee 15/05/2015 ☒ Standing Committee 03/11/2015

Question related to: Annex: Article:	EN:15090: 2012 /EN ISO 20345: 2011/ EN ISO 20349: 2010/ EN ISO 17249: 2013 Clause:	Other:

Key words: Incorrect references

Question:

Following references to EN ISO 20345 are not correct:

EN 15090:2012 Table 4 reference to EN ISO 20345:2011/6.3.1
EN ISO 20349 Table 2 reference to EN ISO 20345:2011/6.3.1

EN ISO 17249 Table 1 reference to EN ISO 20345:2011/6.3.1
reference to EN ISO 20345:2011/6.3.3

What is the recommended way to proceed for notified bodies against this background?

Solution:

Take into account the following references until next revisions:

EN 15090:2012 Table 4	reference to EN ISO 20345:2011/6.3.1	correct /6.3 (WRU)
EN ISO 20349:2010 Table 2	reference to EN ISO 20345:2011/6.3.1	correct /6.3 (WRU
EN ISO 17249:2013 Table 1	reference to EN ISO 20345:2011/6.3.1	correct /6.3 (WRU)
	reference to EN ISO 20345:2011/6.3.3	correct/ 6.2.8 (CR)

Sent to: ☒ members of the VG ☐ other(s) VG ☒ HC (2) ☐ TC (3) ☒ SC (4) ☐ other (5)

(5)

(1) Essential safety requirement
(2) HC = horizontal committee
(3) N° of CEN/TC (Secretary & Chairman)
(4) EEC Standing Committee 89/392
(5) To be specified

	CO-ORDINATION OF NOTIFIED BODIES **PPE-Directive 89/686/EEC + amendments** **RECOMMENDATION FOR USE**	CNB/P/10.192 Revision 02 Language: E

Number of pages: 1	Date: *1st July 2014*	Approval by : Approved on :
Origin : CTC		☒ Vertical Group 01/07/2014 ☒ Horizontal Committee 15/05/2015 ☒ Standing Committee 03/11/2015

Question related to: Annex: Article:	EN/prEN: ISO 20345: 2011 Clause:	Other:

Key words:

Water vapour permeability and coefficient on clog

Question:

The product is a clog without toecap. The manufacturer wants to perform tests according to EN ISO 20347: 2012 and claim the category OB (because the seat area is not closed).
The upper material is a leather but with a specific coating and doesn't fullfill the water vapour permeability and coefficient.
This product cannot be considered as a class II because it's not an ítem of rubber/elastomeric footwear.

So is it possible to certify this product according EN ISO 20347 without WVP/WVC requirement because of his design ?

Solution: No

Need to certify to the PPE Directive using a technical specification because one of compulsory requirement of EN ISO 20347 is not fulfilled.

Sent to: ☒ members of the VG ☐ other(s) VG ☒ HC (2) ☐ TC (3) ☒ SC (4) ☐ other (5)

(5)

(1) Essential safety requirement
(2) HC = horizontal committee
(3) N° of CEN/TC (Secretary & Chairman)
(4) EEC Standing Committee 89/392
(5) To be specified

	CO-ORDINATION OF NOTIFIED BODIES **PPE-Directive 89/686/EEC + amendments** **RECOMMENDATION FOR USE**	CNB/P/10.193 Revision 02 Language: E

Number of pages: 1	Date: *5th February 2015*	Approval by : Approved on :
Origin : TC161/WG3		☒ Vertical Group 10 05/02/2015 ☒ Horizontal Committee 15/05/2015 ☒ Standing Committee 03/11/2015

Question related to: Penetration resistance	EN ISO 13287: 2012	Other:
Annex: Article:	Clause:	

Key words: Slip resistance

Question:

In terms of the footwear, slip resistance is dependent on factors such as soling material type and cleat design also the density, hardness and colour of the wearing surface compound. It is considered that this information may be valuable when analysing any future differences in slip resistance data in which case what is the best way to clearly define the test specimen to enable any trends or changes to be identified and monitored?

Solution:

For information purposes only, EN 13287 slip resistance test reports should include a colour photograph of the outsole submitted for test which clearly shows the tread design and also colour plus test data for the hardness of the material of the wearing face in contact with the ground.

Note. Hardness is not a precise measurement when testing footwear solings. If the laboratory adopts a standard procedure then good quality control data should be established. The aim is to assess if there is a difference between two materials, not to set hardness requirements.

(Note agreed solution does not list a requirement to include the density of the outsole as it is a destructive test and for other reasons of practicality)

Sent to: ☒ members of the VG ☐ other(s) VG ☒ HC (2) ☐ TC (3) ☒ SC (4) ☐ other (5)

(5)

(1) Essential safety requirement
(2) HC = horizontal committee
(3) N° of CEN/TC (Secretary & Chairman)
(4) EEC Standing Committee 89/392
(5) To be specified

	CO-ORDINATION OF NOTIFIED BODIES PPE-Directive 89/686/EEC + amendments RECOMMENDATION FOR USE	CNB/P/10.194 Revision 01 Language: E

Number of pages: 3	Date: *21st October 2015*	Approval by : Approved on : ☒ Vertical Group 10 *21/10/2015* ☒ Horizontal Committee *04/02/2016* ☒ Standing Committee *06/05/2016*
Origin : PFI		

Question related to: EN ISO 20346: 2014		Other:
Annex: Article:	Clause:	

Key words:

Question:

A number of editing errors have been detected in EN ISO 20346:2014.
What is the recommended way to proceed for notified bodies against this background?

Solution:

Take into account the following proposals for the editorial changes.

Sent to: ☒ members of the VG ☐ other(s) VG ☒ HC (2) ☐ TC (3) ☒ SC (4) ☐ other (5)
(5)

(1) Essential safety requirement
(2) HC = horizontal committee
(3) N° of CEN/TC (Secretary & Chairman)
(4) EEC Standing Committee 89/392
(5) To be specified

URGENT CORRECTIONS TO EN ISO 20346

CLAUSE/TABLE	IT SAYS	IT SHOULD SAY
5.3.2.3 (line 1)	safety	protective
5.3.2.4 (line 1)	safety	protective
5.3.2.5.2 (line 1)	safety	protective
6.2.1.3 (paragraph 2, line 4)	Figure 14	Figure 13
6.2.1.3 (paragraph 4, line 1)	Figure 14	Figure 13
6.2.1.3 (paragraph 5, line 1)	Figure 14	Figure 13
6.2.1.5.1 (line 2)	five areas of corrosion, none of which shall exceed 2,5 mm2.	three areas of corrosion, none of which shall measure more than 2 mm in any direction
6.2.1.5.1 (line 6)	five areas of corrosion, none of which shall exceed 2,5 mm2.	three areas of corrosion, none of which shall measure more than 2 mm in any direction

CLAUSE/TABLE	IT SAYS	IT SHOULD SAY
6.2.8.2 (Figure 5)	1, 2, 3, 4	1, 2, a, b
6.2.8.2 (Key)	b Heel	b Minimum height of 30 mm above the feather line 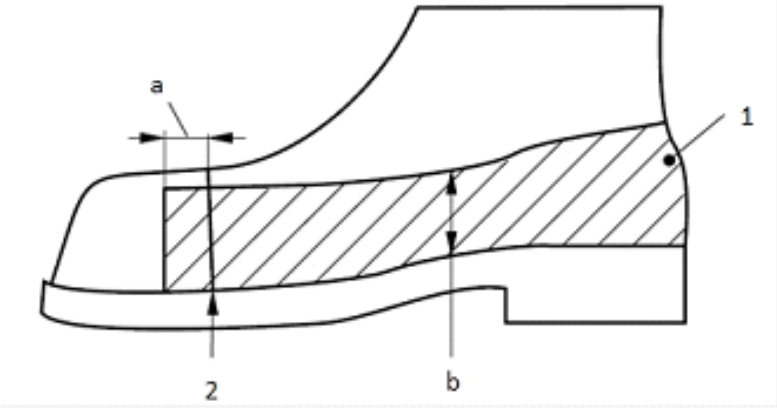 figure 5 - key 1 protective area 2 rear edge of toecap a 10 mm overlap over toecap b 30 mm minimum height above the feather line
7 (Table 20, 3rd column)	S1, S2, S3, S4	P1, P2, P3, P4

	CO-ORDINATION OF NOTIFIED BODIES PPE-Directive 89/686/EEC + amendments RECOMMENDATION FOR USE	CNB/P/10.195 Revision 01 Language: E

Number of pages: 1	Date: *21st October 2015*	Approval by : Approved on :
Origin : CTC		☒ Vertical Group 10 *21/10/2015* ☒ Horizontal Committee *04/02/2016* ☒ Standing Committee 06/05/2016

Question related to: EN 13832-1: 2006		Other:
Annex: Article:	Clause:	

Key words: EN 13832-1: 2006 Stocking, degradation test

Question:

In clause 4.2.3 of EN 13832-1: 2006 - footwear protecting against chemicals - there is a procedure for the preparation of samples for degradation test that states "the lining shall be removed"

Standard EN ISO 20345 : 2011, table 2, includes a note to say that the “stocking covering the last before the moulding process is not considered as a lining"

Below is a picture of a cross section of polymeric footwear with a stocking. - So the question is :- Should this stocking be considered as a lining and be removed before testing or should it be left in place for the degradation test ?

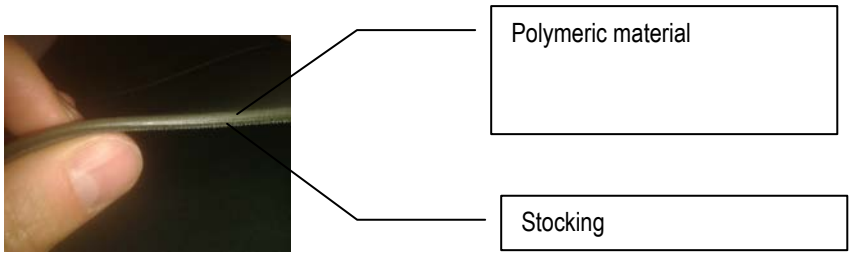

Solution:

If the removal of the stocking damages the sample, it is recommend to test the full complex including the stocking but if the stocking can be removed without damaging the sample then this should be done.

Sent to: ☒ members of the VG ☐ other(s) VG ☒ HC (2) ☐ TC (3) ☒ SC (4) ☐ other (5)

(5)

(1) Essential safety requirement
(2) HC = horizontal committee
(3) N° of CEN/TC (Secretary & Chairman)
(4) EEC Standing Committee 89/392
(5) To be specified

	CO-ORDINATION OF NOTIFIED BODIES PPE-Directive 89/686/EEC + amendments RECOMMENDATION FOR USE	CNB/P/10.196 Revision 01 Language: E

Number of pages: 1	Date: *21st October 2015*	Approval by : Approved on :
Origin : PFI		☒ Vertical Group 10 *21/10/2015* ☒ Horizontal Committee *04/02/2016* ☒ Standing Committee *06/05/2016*

Question related to: EN ISO 20345:2011 (EN ISO 20346: 2014)		Other:
Annex: Article:	Clause:	

Key words: Toe cap, cracks

Question:

Question 1 - EN ISO 20345:2011 clause 5.3.2.3 includes the following requirement for assessment of toe caps following the impact test - "In addition, the toe cap shall not develop any cracks which go through the material, i.e. through which light can be seen." However, the same acceptance criteria is not included in Clause 5.3.2.4 for assessment of the toe cap after the compression test – should it be?

Question 2 - In EN 12568: 2010 clauses 4.2.4, 4.2.4 and 4.4 the presence of any sharp edges in the toe caps after testing is assessed. During footwear testing to EN ISO 20345: 2011 clauses 5.3.2.3 and 5.3.2.4 sharp edges also may occur but there is no requirement to consider these or similar injurious surfaces produced – Should there be?

Solution:

1) Yes - Following compression testing of footwear to EN ISO 20345: 2011 clause 5.3.2.4 –the following additional criteria shall be applied "In addition, the toe cap shall not develop any cracks which go through the material, i.e. through which light can be seen."

2) Yes Further to testing in accordance with EN ISO 20345: 2011 clauses 5.3.2.3 and 5.3.2.4, the sample shall be assessed and rejected if it is damaged in such a way that it could potentially injure the user (for instance sharp edges, delamination or splinter).

Sent to: ☒ members of the VG ☐ other(s) VG ☒ HC (2) ☐ TC (3) ☒ SC (4) ☐ other (5)

(5)

(1) Essential safety requirement
(2) HC = horizontal committee
(3) N° of CEN/TC (Secretary & Chairman)
(4) EEC Standing Committee 89/392
(5) To be specified

	CO-ORDINATION OF NOTIFIED BODIES PPE-Directive 89/686/EEC + amendments RECOMMENDATION FOR USE	CNB/P/10.197 Revision 01 Language: E

Number of pages: 1	Date: *21st October 2015*	Approval by : Approved on :
Origin : CTC		☒ Vertical Group 10 *21/10/2015* ☒ Horizontal Committee *04/02/2016* ☒ Standing Committee *06/05/2016*
Question related to: EN ISO 20345: 2011, water absorption / desorption		Other:
Annex: Article:		Clause:

Key words:

Question:

In an item of safety footwear manufactured with a full lining, which covers the quarter part but which is also used under the insock,. (ie this material is placed between the insock and insole as a full sock as is sometimes found on firefighters footwear), if this lining material is used with a full insock, removable and water permeable ,as defined in table 3 of EN ISO 20345 : 2011, which testing scenario shall be followed?

- Perform the water absorption / desorption on insole only
- Perform the water absorption / desorption on this “lining” material
- Perform the water absorption / desorption on both insole and “lining” material

Solution:

If the insock includes an impermeable membrane, water absorption / desorption can be performed on the “lining” material only. However if the lining does not include an impermeable membrane, the test piece shall include the lining and the insole together.

Sent to: ☒ members of the VG ☐ other(s) VG ☒ HC (2) ☐ TC (3) ☒ SC (4) ☐ other (5)

(5)

(1) Essential safety requirement
(2) HC = horizontal committee
(3) N° of CEN/TC (Secretary & Chairman)
(4) EEC Standing Committee 89/392
(5) To be specified

	CO-ORDINATION OF NOTIFIED BODIES PPE-Directive 89/686/EEC + amendments RECOMMENDATION FOR USE	CNB/P/10.198 Revision 01 Language: E

Number of pages: 1	Date: *21st October 2015*	Approval by : Approved on :
Origin : PFI		☒ Vertical Group 10 *21/10/2015* ☒ Horizontal Committee *04/02/2016* ☒ Standing Committee *06/05/2016*

Question related to: EN ISO 20345: 2011, EN ISO 20346: 2014 and EN ISO 20347: 2012	Other:
Annex: Article:	Clause:

Key words: Open heel region

Question:

According to EN ISO 20345: 2011, EN ISO 20346: 2014 and EN ISO 20347: 2012 an open heel region is allowed with design A footwear. However shoes with an open heel region may not fit the feet correctly so could easily be lost during the walking movement. This is especially critical for ergonomic features and for slip resistance meaning BHSR 1.1.1 and 1.3.1 may only be partly fulfilled, if there is no feature to hold the footwear on the feet. What could be done to address this concern?

Solution:

When a heel strap is present that can be moved – for instance onto the front part as shown above, a warning shall be included in the user information to instruct the wearer to configure the strap round the back of the foot during use.

Sent to: ☒ members of the VG ☐ other(s) VG ☒ HC (2) ☐ TC (3) ☒ SC (4) ☐ other (5)

(5)

(1) Essential safety requirement
(2) HC = horizontal committee
(3) N° of CEN/TC (Secretary & Chairman)
(4) EEC Standing Committee 89/392
(5) To be specified

	CO-ORDINATION OF NOTIFIED BODIES PPE-Directive 89/686/EEC + amendments RECOMMENDATION FOR USE	CNB/P/10.199 Revision 01 Language: E

Number of pages: 1	Date: 25th May 2016	Approval by : Approved on :
Origin : SATRA		☒ Vertical Group 25/05/2016 ☒ Horizontal Committee 13/10/2016 ☒ Standing Committee 20/01/2017

Question related to: Overshoes without heel section – slip resistance	EN/prEN:	Other:
Annex: Article:	Clause:	

Key words: Overshoe, slip resistance

Question:

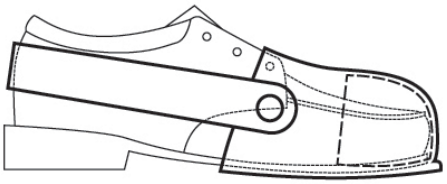

If an overshoe such as shown above is designed (and claims) to provide only toe protection can it be certified?

The question arises because the overshoe does not cover the complete outsole, hence assessment of slip resistance (particularly in the heel area) is meaningless as it will depend on the footwear being worn underneath.

Solution:

Yes this product is considered to be PPE and can be certified to the Directive 89/686 for toe protection (impact & compression) only – Note when evaluating internal clearance it will be necessary to test the overshoe with an item of footwear with an outsole thickness equivalent to the maximum recommended by the overshoe manufacturer. Other properties such as ergonomics (when worn in combination with a recommended item of footwear), corrosion resistance (where relevant) and strength of the strap shall also be considered. The user information shall include warnings explaining that the product does not provide slip resistance and the products shall not be used in an environment where slip resistance is required.

Sent to: ☒ members of the VG ☐ other(s) VG ☒ HC (2) ☐ TC (3) ☒ SC (4) ☐ other (5)

(5)

(1) Essential safety requirement
(2) HC = horizontal committee
(3) N° of CEN/TC (Secretary & Chairman)
(4) EEC Standing Committee 89/392
(5) To be specified

	CO-ORDINATION OF NOTIFIED BODIES PPE-Directive 89/686/EEC + amendments RECOMMENDATION FOR USE	CNB/P/10.200 Revision 01 Language: E

Number of pages: 1	Date: 25th May 2016	Approval by : Approved on : ☒ Vertical Group 25/05/2016 ☒ Horizontal Committee 13/10/2016 ☒ Standing Committee 20/01/2017
Origin : Intertek		

Question related to: Certification of a sandal Annex: Article:	EN/prEN:	Other:
	Clause:	

Key words: Sandal

Question:

Could this sandal be certified to EN ISO 20347:2012?

Solution:

Yes, provided the footwear meets the claimed requirements. Hence not S1 or O1 because the seat region is not closed

Sent to: ☒ members of the VG ☐ other(s) VG ☒ HC (2) ☐ TC (3) ☒ SC (4) ☐ other (5)

(5)

(1) Essential safety requirement
(2) HC = horizontal committee
(3) N° of CEN/TC (Secretary & Chairman)
(4) EEC Standing Committee 89/392
(5) To be specified

	CO-ORDINATION OF NOTIFIED BODIES PPE-Directive 89/686/EEC + amendments RECOMMENDATION FOR USE	CNB/P/10.201 Revision 01 Language: E

Number of pages: 1	Date: 25th May 2016	Approval by : Approved on :
Origin : INESCOP		☒ Vertical Group 25/05/2016 ☒ Horizontal Committee 13/10/2016 ☒ Standing Committee 20/01/2017

Question related to: Insulation against heat	EN/prEN: EN 15090: 2012	Other:
Annex: Article:	Clause:	

Key words: Sandbath

Question:

On some occasions, when conducting the test at 250ºC, nothing special was noticed during the 45 minute of testing, but when the sample was removed from the sandbath, ignition (without a flame) could be observed at certain locations on the sole. There was continuous and localised smoke on that spot and sometimes it was necessary to use water to extinguish it. How should this be considered?

Solution

When there is localised smoke, this means that there has been ignition and the flame test criterion should also be applied (EN 15090:2012, clause 6.3.3.).

Sent to: ☒ members of the VG ☐ other(s) VG ☒ HC (2) ☐ TC (3) ☒ SC (4) ☐ other (5)

(5)

(1) Essential safety requirement
(2) HC = horizontal committee
(3) N° of CEN/TC (Secretary & Chairman)
(4) EEC Standing Committee 89/392
(5) To be specified

Vertical Recommendation for Use sheets (RfUs)
of Vertical Group 11 "Protection against Falls from a Height"
of the European Coordination of Notified Bodies in the field of PPE

No.	Version	Reference	Key words	Approved by Vertical Group 11	Approved by Horizontal Committee	Approved by PPE Expert Group
11-001	1	89/686/EEC Article 10	Number of test objects for EC-Testing	26/04/1996	08/10/2012	12/03/2013
11-003	2	EN 364:1992, clause 5.6.2	Guided type fall arrester; performance test; distance of the test mass	12/10/2006	08/10/2012	12/03/2013
11-004	3	EN 364:1992, clause 5.1.2.1	Length of the test lanyard	17/10/2012	17/06/2013	19/09/2015
11-006	2	89/686/EEC, Article 10	EC type examined equipment; minor variations, additional testing/ verification	12/10/2006	08/10/2012	12/03/2013
11-007	2	89/686/EEC, Article 10	EC type examined equipment; medium variations; verification; re-examination	12/10/2006	08/10/2012	12/03/2013
11-008	2	89/686/EEC, Article 10	EC type examined equipment; essential variations; specific or partial tests	12/10/2006	08/10/2012	12/03/2013
11-009	2	89/686/EEC, Article 10	EC type examined equipment; essential variations; EC type examination	12/10/2006	08/10/2012	12/03/2013
11-015	3	89/686/EEC	Guided type fall arrester according to EN 353-1:1992; sand mass; peak force	12/10/2006	08/10/2012	12/03/2013
11-019	3	EN 364:1992	Energy absorber; chain test lanyard	12/10/2006	08/10/2012	12/03/2013
11-023	4	EN/prEN all	Static testing; stressing rate	23/10/2008	08/10/2012	12/03/2013
11-024	4	EN 364:1992	Dynamic force measurement; filter characteristic	12/10/2006	08/10/2012	12/03/2013
11-031	1		Canyoning; caving	12/10/2006	08/10/2012	12/03/2013
11-034	2	EN 353-2:2002	Fall protection system; special use	23/10/2008	08/10/2012	12/03/2013
11-037	1	EN 1891:1998, EN 364:1992, clause 5.9.2	Low stretch kernmantel rope – drop machine	19/10/2001	08/10/2012	12/03/2013
11-040	1	89/686/EEC, Article 10, EN 12277:1998, EN 566:1997EN 565:1997 etc.	Date of manufacture; marking; mountaineering equipment subject to ageing	29/10/2002	08/10/2012	12/03/2013
11-041	2	EN 795:2012 - type B	Vacuum anchor point	17/10/2012	17/06/2013	19/09/2015
11-042	2	89/686/EEC, Article 10, EN 353-1 & 2:2002	Guided Type Fall Arrester – Incorrect attachment and use	24/11/2005	08/10/2012	12/03/2013
11-043	2	EN 361:2002, EN 358:1999	Back support; full body harness; waist belt; work positioning elements	24/11/2005	08/10/2012	12/03/2013
11-049	1	EN 1891:1998	Low stretch kernmantel ropes; diameter	19/10/2001	08/10/2012	12/03/2013
11-050	3	EN 353-2:2002, clause: 4.4.2	Guided type fall arrester including a flexible anchor line; static strength	11/11/2009	08/10/2012	12/03/2013
11-051	2	89/686/EEC, Article 10, EN 361:2002 and others	Textile materials for PPE against fall from height	13/10/2011	08/10/2012	12/03/2013

Vertical Recommendation for Use sheets (RfUs)
of Vertical Group 11 "Protection against Falls from a Height"
of the European Coordination of Notified Bodies in the field of PPE

No.	Version	Reference	Key words	Approved by Vertical Group 11	Approved by Horizontal Committee	Approved by PPE Expert Group
11-053	1	89/686/EEC, Article 10, EN 361:2002	Full body harness: front loops	26/11/2004	08/10/2012	12/03/2013
11-054	7	EN 360:2002	Horizontal use; retractable type fall arrester; sharp edge (type B) test	17/10/2012	17/06/2013	19/09/2015
11-057	1	89/686/EEC, Article 10, EN 361:2002	Marking of fall arrest attachment points on EN 361:2002 harnesses	26/11/2004	08/10/2012	12/03/2013
11-060	7	EN 360:2002	Horizontal use; retractable type fall arrester, edge (type A) test	17/10/2012	17/06/2013	19/09/2015
11-061	3	EN 795:1996 / A1:2000	Test methodology used for EN 795 class B – temporary lifeline	11/11/2009	08/10/2012	12/03/2013
11-062	2	89/686/EEC, Article 10, EN 355, EN 360, EN 353-1 & 2	Testing with higher loads	23/10/2008	08/10/2012	12/03/2013
11-063	2	EN 355:2002	Energy absorber - static test	17/10/2012	17/06/2013	19/09/2015
11-064	1	EN 353:2002	Different fall arrestors for fall arrest systems	25/10/2007	08/10/2012	12/03/2013
11-067	1	EN 568, Clause 4.2.4.3	Ice anchors, resistance to fracture	23/10/2008	08/10/2012	12/03/2013
11-068	1	EN 12278:2007, Clause: 4.2	Pulley, sheaves, static strength test	11/11/2009	08/10/2012	12/03/2013
11-069	2	EN 361:2002, Clause 4.2	Synthetic fibre, breaking tenacity	11/11/2009	08/10/2012	12/03/2013
11-070	1	EN 15567-1:2007	Rope, zip wire, tyrolean activity	12/11/2009	08/10/2012	12/03/2013
11-071	2	89/686/EEC, Article 10, EN 358	Restrain lanyard, belt, category	13/10/2010	08/10/2012	12/03/2013
11-072	1	89/686/EEC, Article 10, EN 813	Work positioning, dynamic test, torso dummy	12/10/2011	08/10/2012	12/03/2013
11-073	2	89/686/EEC, Article 10, EN 353-1	Withdrawal of harmonized list, back fall test, sideway fall	13/10/2010	08/10/2012	12/03/2013
11-077	1	89/686/EEC, Article 10, EN 795+A1	Anchor device, class B, car	12/10/2011	08/10/2012	12/03/2013
11-079	1	89/686/EEC, Article 10, 11A, EN 360, EN 364	Dynamic performance	12/10/2011	08/10/2012	12/03/2013
11-080	1	89/686/EEC, Article 10, EN 353-2	Work positioning	12/10/2011	08/10/2012	12/03/2013
11-081	1	89/686/EEC, Article 10, EN 353-2, EN 364	Guided type fall arrester, dynamic performance, non integral absorber	12/10/2011	08/10/2012	12/03/2013
11-082	1	89/686/EEC, Article 10, EN 353-2, EN 364	Guided type fall arrester, dynamic performance, eyebolt	12/10/2011	08/10/2012	12/03/2013
11-083	2	EN 355:2002	Samples, test order	17/10/2012	17/06/2013	19/09/2015
11-084	1	89/686/EEC, Art. 10, EN 360, clause 5.1.2.3, EN 364, clause 5.11.6.2	Retractable type fall arrester, locking test	12/10/2011	08/10/2012	12/03/2013

Vertical Recommendation for Use sheets (RfUs)
of Vertical Group 11 "Protection against Falls from a Height"
of the European Coordination of Notified Bodies in the field of PPE

No.	Version	Reference	Key words	Approved by Vertical Group 11	Approved by Horizontal Committee	Approved by PPE Expert Group
11-085	2	EN 360:2002	Retractable fall arrester, fall factor, locking feature	17/10/2012	17/06/2013	19/09/2015
11-086	1	89/686/EEC, Article 10, EN 360, Art. 4.2 – para. 3	Termination, connector	12/10/2011	08/10/2012	12/03/2013
11-088	1	89/686/EEC, Article 10, EN 795 + A1	Rope / Knots tied by end user	12/10/2011	08/10/2012	12/03/2013
11-089	1	89/686/EEC, Article 10, 11A, EN 361, clause 4.3, EN 364, clause 5.1.4	Harness, static strength	12/10/2011	08/10/2012	12/03/2013
11-090	1	89/686/EEC, Article 10, EN 362	Latch distance from connector body	12/10/2011	08/10/2012	12/03/2013
11-092	1	89/686/EEC, Article 10, 11 A, EN 361, EN 12277	Harness, sizes, torso dummy	12/10/2011	08/10/2012	12/03/2013
11-094	2	EN 358:1999, EN 354:2010	Pole choker, work positioning lanyard	27/02/2013	17/06/2013	19/09/2015

Note: Recommendation for Use sheets which deal with withdrawn and / or superseded standards and which no longer apply to new certifications are published as reference for previous files.

	CO-ORDINATION OF NOTIFIED BODIES **PPE-Directive 89/686/EEC + amendments** **RECOMMENDATION FOR USE**	CNB/P/11.001 Revision 01 Language: E

Number of pages: 1	Date: 15.05.1995	Approval by :	Approved on :
Origin : Vertical Group 11 'Protection against Falls from a Height'		☒ Vertical Group ☒ Horizontal Committee ☒ Standing Committee	26.04.1996 08.10.2012 12.03.2013

Question related to: Directive 89/686/EEC Annex: Article: 10	EN/prEN: Clause:	Other:

Key words:

Number of test objects for EC-Testing

Question:

How many test objects are required for EC-testing in the case, that there is no special requirement in the standard?

Solution:

One test object is considered to be sufficient, unless otherwise indicated in the standard

Sent for information to: ☒ members of the VG ☐ other(s) VG ☒ HC (2) ☐ TC (3) ☒ SC (4) ☐ other (5)

(3): (5):

(1) Essential safety requirement
(2) HC = horizontal committee
(3) N° of CEN/TC (Secretary & Chairman)
(4) EEC Standing Committee 89/392
(5) To be specified

	CO-ORDINATION OF NOTIFIED BODIES **PPE-Directive 89/686/EEC + amendments** **RECOMMENDATION FOR USE**	CNB/P/11.003 Revision 02 Language: E

Number of pages: 1	Date: 21.06.1999	Approval by :	Approved on :
Origin : Vertical Group 11 'Protection against Falls from a Height'		☒ Vertical Group ☒ Horizontal Committee ☒ Standing Committee	12.10.2006 08.10.2012 12.03.2013

Question related to: Annex: Article:	EN/prEN: 364:1992 Clause: 5.6.2	Other:

Key words:

Guided type fall arrester; performance test; distance of the test mass

Question:

Is the distance of 300 mm correct, if a sand bag is used in the method B of the performance test?

Solution:

The vertical group decided that the distance of 300 mm should be measured to the attachment point on the side of the sand bag. Figure 8 of EN 364:1992 should be amended accordingly. The Notified Bodies will apply this decision in testing

Sent for information to: ☒ members of the VG ☐ other(s) VG ☒ HC (2) ☒ TC (3) ☒ SC (4) ☐ other (5)

(3): (5):

(1) Essential safety requirement
(2) HC = horizontal committee
(3) N° of CEN/TC (Secretary & Chairman)
(4) EEC Standing Committee 89/392
(5) To be specified

	CO-ORDINATION OF NOTIFIED BODIES **PPE-Directive 89/686/EEC + amendments** **RECOMMENDATION FOR USE**	CNB/P/11.004 Revision 03 Language: E

Number of pages: 1	Date: 17.10.2012	Approval by :	Approved on :
Origin : Vertical Group 11 'Protection against Falls from a Height'		☒ Vertical Group ☒ Horizontal Committee ☒ Standing Committee	17.10.2012 17.06.2013 19.09.2015

Question related to: Annex: Article:	EN/prEN: 364:1992 Clause: 5.1.2.1	Other:

Key words:

Length of the test lanyard

Question:

What is the definition of the length of a test lanyard?

Solution:

Define the length as per figure 2 of EN 1497:2007.

Sent for information to: ☒ members of the VG ☐ other(s) VG ☒ HC (2) ☒ TC (3) ☒ SC (4) ☐ other (5)

(3): (5):

(1) Essential safety requirement
(2) HC = horizontal committee
(3) N° of CEN/TC (Secretary & Chairman)
(4) EEC Standing Committee 89/392
(5) To be specified

	CO-ORDINATION OF NOTIFIED BODIES **PPE-Directive 89/686/EEC + amendments** **RECOMMENDATION FOR USE**	CNB/P/11.006 Revision 02 Language: E

Number of pages: 1	Date: 21.06.1999	Approval by : Approved on :
Origin : Vertical Group 11 'Protection against Falls from a Height'		☒ Vertical Group 12.10.2006 ☒ Horizontal Committee 08.10.2012 ☒ Standing Committee 12.03.2013

Question related to: Directive 89/686/EEC Annex: Article: 10	EN/prEN: Clause:	Other:

Key words:

EC type examined equipment; minor variations, additional testing / verification

Question:

What are minor variations within EC type examined equipment which do not require additional testing / verification?

Solution:

Examples of minor changes:

- Change in trade mark
- Change in reference
- Change in marking

Documents to be supplied:

- Formal letter from the manufacturer describing the change (s) in the equipment and confirming that there is no further modification
- Manufacturers technical specification relative to the change
- Sample or specimen

Conditions of validity:

- Delivery of an EC type examination extension
- The extension file is to be kept in the file of the original equipment

Sent for information to: ☒ members of the VG ☐ other(s) VG ☒ HC (2) ☐ TC (3) ☒ SC (4) ☐ other (5)

(3): (5):

(1) Essential safety requirement
(2) HC = horizontal committee
(3) N° of CEN/TC (Secretary & Chairman)
(4) EEC Standing Committee 89/392
(5) To be specified

	CO-ORDINATION OF NOTIFIED BODIES **PPE-Directive 89/686/EEC + amendments** **RECOMMENDATION FOR USE**	CNB/P/11.007 Revision 02 Language: E

Number of pages: 1	Date: 21.06.1999	Approval by : Approved on :
Origin : Vertical Group 11 'Protection against Falls from a Height'		☒ Vertical Group 12.10.2006 ☒ Horizontal Committee 08.10.2012 ☒ Standing Committee 12.03.2013

Question related to: Directive 89/686/EEC Annex: Article: 10	EN/prEN: Clause:	Other:

Key words:

EC type examined equipment; medium variations; verification; re-examination

Question:

What are medium variations within EC type examined equipment which require verification by re-checking, visual inspection, re-examination (visual), review?

Solution:

<u>Examples of changes to be verified by re-examination:</u>

- Change in the colour of a strap or a sewing thread
- On a harness, an addition, a removal or a modification in an accessory-support device
- An addition, a subtraction or modification in a size (harness size or lanyard length)
- Change in length of a lanyard on a retractable type fall arrester

<u>Documents to be supplied by the manufacturer:</u>

- Formal letter from the manufacturer describing the change (s) in the equipment and confirming that there is no further modification
- Manufacturers technical specification relative to the change (drawings, parts list, letter of subcontractor, …)
- One specimen of the modified equipment for verification and storage
- One specimen of the original equipment for comparison with the modified equipment

<u>Conditions of validity:</u>

- Examination on the modified equipment
- Delivery of an EC type examination extension
- The extension file is to be kept in the file of the original equipment

Sent for information to: ☒ members of the VG ☐ other(s) VG ☒ HC (2) ☐ TC (3) ☒ SC (4) ☐ other (5)

(3): (5):

(1) Essential safety requirement
(2) HC = horizontal committee
(3) N° of CEN/TC (Secretary & Chairman)
(4) EEC Standing Committee 89/392
(5) To be specified

	CO-ORDINATION OF NOTIFIED BODIES **PPE-Directive 89/686/EEC + amendments** **RECOMMENDATION FOR USE**	CNB/P/11.008 Revision 02 Language: E

Number of pages: 1	Date: 21.06.1999	Approval by :	Approved on :
Origin : Vertical Group 11 'Protection against Falls from a Height'		☒ Vertical Group ☒ Horizontal Committee ☒ Standing Committee	12.10.2006 08.10.2012 12.03.2013

Question related to: Directive 89/686/EEC	EN/prEN:	Other:
Annex: Article: 10	Clause:	

Key words:

EC type examined equipment; essential variations; specific or partial tests

Question:

What are essential variations within EC type examined equipment which require specific or partial test?

Solution:

Examples of essential changes requiring specific or partial tests:

- On a belt, a change in the type of carriage guard
- On a harness, a change in the metal buckle (material, dimension, treatment, ...)
- On a harness, a change in the dorsal plate
- On a connector, a change in the anti-corrosion treatment
- On a retractable type fall arrester, a change in the termination

Documents to be supplied by the manufacturer :

- Formal letter from the manufacturer describing the change (s) in the equipment and confirming that there is no further modification
- Manufacturers technical specification relative to the change (drawings, parts list, letter of subcontractor, ...)
- One or several specimens of the modified equipment, or one or several samples of the modified component for performing the tests
- One specimen of the original equipment for comparison with the modified equipment

Conditions of validity :

- Performance of specific tests on the modified equipment
- Delivery of an EC type examination extension
- The extension file is to be kept in the file of the original equipment

N.B.: When an equipment is modified several times, it is necessary to query the continuation of the original certificate.

Sent for information to: ☒ members of the VG ☐ other(s) VG ☒ HC (2) ☐ TC (3) ☒ SC (4) ☐ other (5)

(3): (5):

(1) Essential safety requirement
(2) HC = horizontal committee
(3) N° of CEN/TC (Secretary & Chairman)
(4) EEC Standing Committee 89/392
(5) To be specified

	CO-ORDINATION OF NOTIFIED BODIES **PPE-Directive 89/686/EEC + amendments** **RECOMMENDATION FOR USE**	CNB/P/11.009 Revision 02 Language: E

Number of pages: 1	Date: 21.06.1999	Approval by : Approved on :
Origin : Vertical Group 11 'Protection against Falls from a Height'		☒ Vertical Group 12.10.2006 ☒ Horizontal Committee 08.10.2012 ☒ Standing Committee 12.03.2013

Question related to: Directive 89/686/EEC Annex: Article: 10	EN/prEN: Clause:	Other:

Key words:

EC type examined equipment; essential variations; EC type examination

Question:

What are essential variations in EC type examined equipment which require a new EC type examination?

Solution:

Examples of essential changes requiring an EC type examination:

- On all PPE types, simultaneous or successive changes in components requiring processing as in sheet no. 11.008
- On a harness, a change in the arrangement of straps and/or seams
- On a harness, a fundamental change in strap (width, material, ...)
- On a harness, an addition, a removal or a shifting of an attachment point
- On a lanyard, a change in the termination (slice, ferrule, ...)
- On a retractable type fall arrester, a fundamental change in components
- On a guided type fall arrester on anchorage line, a change in the fall arrester (principle, configuration, material, ...) or in the anchorage line (diameter, material, ...)

Documents to be supplied by the manufacturer:

- According to the EC type examination

Conditions of validity:

- According to the EC type examination procedure
- The equipment is subjected of a specific storage and identification

Sent for information to: ☒ members of the VG ☐ other(s) VG ☒ HC (2) ☐ TC (3) ☒ SC (4) ☐ other (5)

(3): (5):

(1) Essential safety requirement
(2) HC = horizontal committee
(3) N° of CEN/TC (Secretary & Chairman)
(4) EEC Standing Committee 89/392
(5) To be specified

	CO-ORDINATION OF NOTIFIED BODIES **PPE-Directive 89/686/EEC + amendments** **RECOMMENDATION FOR USE**	CNB/P/11.015 Revision 03 Language: E

Number of pages: 1	Date: 21.06.1999	Approval by : Approved on :
Origin : Vertical Group 11 'Protection against Falls from a Height'		☒ Vertical Group 12.10.2006 ☒ Horizontal Committee 08.10.2012 ☒ Standing Committee 12.03.2013

Question related to: Directive 89/686/EEC Annex: Article:	EN/prEN: Clause:	Other:

Key words:

Guided type fall arrester according to EN 353-1:1992; sand mass; peak force

Question:

How can the shock influence of the sand mass on the peak force be avoided?

Solution:

The vertical group decided to prefer method B of EN 364:1992, clause 5.6.2.2, for testing guided type fall arresters on a rigid anchorage line (EN 353-1:1992).

The sensor has to be fixed to the sand mass so as not to increase the height of the fall.

Sent for information to: ☒ members of the VG ☐ other(s) VG ☒ HC (2) ☒ TC (3) ☒ SC (4) ☐ other (5)

(3): (5):

(1) Essential safety requirement
(2) HC = horizontal committee
(3) N° of CEN/TC (Secretary & Chairman)
(4) EEC Standing Committee 89/392
(5) To be specified

	CO-ORDINATION OF NOTIFIED BODIES **PPE-Directive 89/686/EEC + amendments** **RECOMMENDATION FOR USE**	CNB/P/11.019 Revision 03 Language: E

Number of pages: 1	Date: 21.06.1999	Approval by :	Approved on :
Origin : Vertical Group 11 'Protection against Falls from a Height'		☒ Vertical Group ☒ Horizontal Committee ☒ Standing Committee	12.10.2006 08.10.2012 12.03.2013

Question related to: Annex: Article:	EN/prEN: 364:1992 Clause:	Other:

Key words:

energy absorber; chain test lanyard

Question:

How can the influence of the chain test lanyard on the peak force in the dynamic performance test of an energy absorber be avoided?

Solution:

The influence of the chain test lanyard on the peak force in the dynamic performance test of an energy absorber can be avoided, if the load cell is directly connected to the energy absorber and not to the chain test lanyard.

Sent for information to: ☒ members of the VG ☐ other(s) VG ☒ HC (2) ☒ TC (3) ☒ SC (4) ☐ other (5)

(3): (5):

(1) Essential safety requirement
(2) HC = horizontal committee
(3) N° of CEN/TC (Secretary & Chairman)
(4) EEC Standing Committee 89/392
(5) To be specified

	CO-ORDINATION OF NOTIFIED BODIES **PPE-Directive 89/686/EEC + amendments** **RECOMMENDATION FOR USE**	CNB/P/11.023 Revision 04 Language: E

Number of pages: 1	Date: 25.10.2007	Approval by :	Approved on :
Origin : Vertical Group 11 'Protection against Falls from a Height'		☒ Vertical Group ☒ Horizontal Committee ☒ Standing Committee	23.10.2008 08.10.2012 12.03.2013

Question related to: Annex: Article:	EN/prEN: all Clause:	Other:

Key words:

static testing; stressing rate

Question:

How can the stressing rate during static testing be adjusted to avoid dynamic effect and overshooting of force control equipment?

Solution:

The stressing rate during static testing shall not be constant or at a certain strain rate. The required static force shall be reached within a acceptable time to avoid dynamic effects and overshooting of force control equipment.

Sent for information to: ☒ members of the VG ☐ other(s) VG ☒ HC (2) ☒ TC (3) ☒ SC (4) ☐ other (5)

(3): (5):

(1) Essential safety requirement
(2) HC = horizontal committee
(3) N° of CEN/TC (Secretary & Chairman)
(4) EEC Standing Committee 89/392
(5) To be specified

	CO-ORDINATION OF NOTIFIED BODIES **PPE-Directive 89/686/EEC + amendments** **RECOMMENDATION FOR USE**	CNB/P/11.024 Revision 04 Language: E

Number of pages: 1	Date: 21.06.1999	Approval by :	Approved on :
Origin : Vertical Group 11 'Protection against Falls from a Height'		☒ Vertical Group ☒ Horizontal Committee ☒ Standing Committee	12.10.2006 08.10.2012 12.03.2013

Question related to: Annex: Article:	EN/prEN: 364:1992 Clause:	Other:

Key words:

dynamic force measurement; filter characteristic

Question:

How are the filter characteristics used for dynamic force measurements?

Solution:

The filter characteristics used for dynamic force measurements during testing of PPE against falls from a height are as follows:

1. Type: Low-Pass
2. Characteristic: Butterworth
3. Cutoff-Frequency: 60 Hz
4. Tolerance level at 0 Hz : +0,1/-0,2 dB
5. Tolerance level at 60 Hz : (-3dB) +0,1/-0,3 dB
6. Slope: 24 dB/Octave
7. Tolerance level of the slope : +5/-5 dB
8. Attenuation band: -50 dB

Sent for information to: ☒ members of the VG ☐ other(s) VG ☒ HC (2) ☒ TC (3) ☒ SC (4) ☐ other (5)

(3): (5):

(1) Essential safety requirement
(2) HC = horizontal committee
(3) N° of CEN/TC (Secretary & Chairman)
(4) EEC Standing Committee 89/392
(5) To be specified

	CO-ORDINATION OF NOTIFIED BODIES **PPE-Directive 89/686/EEC + amendments** **RECOMMENDATION FOR USE**	CNB/P/11.031 Revision 01 Language: E

Number of pages: 1	Date: 20.10.1997	Approval by : Approved on :
Origin : Vertical Group 11 'Protection against Falls from a Height'		☒ Vertical Group 12.10.2006 ☒ Horizontal Committee 08.10.2012 ☒ Standing Committee 12.03.2013

Question related to: Annex: Article:	EN/prEN: Clause:	Other:

Key words:

Canyoning; caving

Question:

How to perform testing of harnesses used in "canyoning" and "caving" sport?

Solution:

Harnesses used in above described sports have to be tested according to EN 12277:2007 "Mountaineering Equipment - Harnesses"

Sent for information to: ☒ members of the VG ☐ other(s) VG ☒ HC (2) ☒ TC (3) ☒ SC (4) ☐ other (5)

(3): (5):

(1) Essential safety requirement
(2) HC = horizontal committee
(3) N° of CEN/TC (Secretary & Chairman)
(4) EEC Standing Committee 89/392
(5) To be specified

	CO-ORDINATION OF NOTIFIED BODIES **PPE-Directive 89/686/EEC + amendments** **RECOMMENDATION FOR USE**	CNB/P/11.034 Revision 02 Language: E

Number of pages: 2	Date: 23.10.2008	Approval by :	Approved on :
Origin : Vertical Group 11 'Protection against Falls from a Height'		☒ Vertical Group ☒ Horizontal Committee ☒ Standing Committee	23.10.2008 08.10.2012 12.03.2013

Question related to: Directive 89/686/EEC Annex: Article:	EN/prEN: EN 353-2 :2002 Clause:	Other:

Key words:

Fall protection system; special use

Question:

How to test and certify fall protection systems for use in corrosion protective work on latticed tower masts

Solution:

See attached

Sent for information to: ☒ members of the VG ☐ other(s) VG ☒ HC (2) ☒ TC (3) ☒ SC (4) ☐ other (5)

(3): (5):

(1) Essential safety requirement
(2) HC = horizontal committee
(3) N° of CEN/TC (Secretary & Chairman)
(4) EEC Standing Committee 89/392
(5) To be specified

Requirement: see EN 353-2:2002

diverging from the standard in the following points:

- length of the lanyard > 1 m
- arrest distance H ≤ 5,75 m
- the „locking test after conditioning" can be omitted

Additional requirements:

- The fall arrester must be provided with a self-locking device that prevents the fall arrester from sliding down the anchor line.
- It must not be possible to release the locking device of the fall arrester when the user holds on to it in panic in case of a fall from a height.
- static strength test of the anchor line with the fall arrester attached (15 kN, to be maintained for 3 min.)
- The correct function of the fall arrest system has to be ensured even if the coating materials can soil the device.
- The position of the lower attachment on the anchor line must not change during the loading or load alleviation of the flexible anchor line.

Tests to be carried out:

- dynamic performance test with the shortest possible length of the rope, according to EN 364:1992, clause 5.5.2.
- for systems with two ropes, the load may be measured at either the fall arrester or at the lanyard
- dynamic performance in the lower part of the anchor line; with the system attached at the maximum permissible height (drop test with a 100 kg falling mass carried out at a height of approx. 8 m above ground level - measure the arrest distance H after the test, no determination of the arrest force)
- dynamic performance test according to EN 364:1992, clause 5.5.4
- static strength of the flexible anchor line (for textile materials 22 kN, for metallic materials 15 kN, to be maintained for 3 min. in either case), attachment at the end terminations for ropes with permanently installed end terminations or via discs for ropes without permanently installed end terminations (knots)
- static strength test of the lanyard, according to EN 364:1992, clause 5.2.2 (for textile materials 22 kN, for metallic materials 15 kN).
- static strength test carried out on the anchor fine with the guided type fall arrester attached (15 kN, to be maintained for 3 min.), if necessary, the rope is knotted in order to block the fall arrester
- corrosion resistance according to EN 364:1992, clause 5.13
- if the flexible anchor line consists of two ropes, static strength test of the lower attachment (15 kN, to be maintained for 3 min.)

Tests to be carried out:

- dynamic performance test with the shortest possible length of the rope, according to EN 364:1992, clause 5.5.2.
- for systems with two ropes, the load may be measured at either the fall arrester or at the lanyard
- dynamic performance in the lower part of the anchor line; with the system attached at the maximum permissible height (drop test with a 100 kg falling mass carried out at a height of approx. 8 m above ground level measure the arrest distance H after the test, no determination of the arrest force)
- dynamic performance test according to EN 364:1992, clause 5.5.4
- static strength of the flexible anchor line (for textile materials 22 kN, for metallic materials 15 kN, to be maintained for 3 min. in either case), attachment at the end terminations for ropes with permanently installed and terminations or via discs for ropes without permanently installed end terminations (knots)
- static strength test of the lanyard, according to EN 364:1992, clause 5.2.2 (for textile materials 22 kN, for metallic materials 15 kN)
- static strength test carried out on the anchor line with the guided type fall arrester attached (15 kN, to be maintained for 3 min.), if necessary, the rope is knotted in order to block the fall arrester
- corrosion resistance according to EN 364:1992, clause 5.13
- if the flexible anchor line consists of two ropes, static strength test of the lower attachment (15 kN, to be maintained for 3 min.)

Additional information to be included in the instructions for use:

- information that the fall arrest system may only be used in corrosion protection work on latticed tower masts.
- warning: a collision with elements of the structure cannot be excluded

	CO-ORDINATION OF NOTIFIED BODIES **PPE-Directive 89/686/EEC + amendments** **RECOMMENDATION FOR USE**	CNB/P/11.037 Revision 01 Language: E

Number of pages: 1	Date: 03.11.2000	Approval by : Approved on : ☒ Vertical Group 19.10.2001 ☒ Horizontal Committee 08.10.2012 ☒ Standing Committee 12.03.2013
Origin : Vertical Group 11 'Protection against Falls from a Height'		

Question related to: Directive 89/686/EEC Annex: Article:	EN/prEN: 1891:1998, 364:1992 Clause: 5.9.2	Other:

Key words:

Low stretch kernmantel rope - drop machine

Question:

Dynamic performance and number of drops: Which drop machine has to be used (free fall or guided)?

Solution:

VG11 recommends to use the free fall machine.

Sent for information to: ☒ members of the VG ☐ other(s) VG ☒ HC (2) ☐ TC (3) ☒ SC (4) ☐ other (5)

(3): (5):

(1) Essential safety requirement
(2) HC = horizontal committee
(3) N° of CEN/TC (Secretary & Chairman)
(4) EEC Standing Committee 89/392
(5) To be specified

	CO-ORDINATION OF NOTIFIED BODIES **PPE-Directive 89/686/EEC + amendments** **RECOMMENDATION FOR USE**	CNB/P/11.040 Revision 01 Language: E

Number of pages: 1	Date: 29.10.2002	Approval by : Approved on : ☒ Vertical Group 29.10.2002 ☒ Horizontal Committee 08.10.2012 ☒ Standing Committee 12.03.2013
Origin : Vertical Group 11 'Protection against Falls from a Height'		

Question related to: Directive 89/686/EEC Annex: Article: 10	EN/prEN: 12277:1998 EN 566:1997 EN 565:1997 etc. Clause:	Other:

Key words:

date of manufacture; marking; mountaineering equipment subject to ageing

Question:

Should mountaineering equipment subject to ageing be marked with the date of manufacture if the particular standard does not require this?

Solution:

YES - All PPE subject to ageing should be marked with the date of manufacture. (EC directive 89/686 Annex II Paragraph 2.4)

Sent for information to: ☒ members of the VG ☐ other(s) VG ☒ HC (2) ☒ TC (3) ☒ SC (4) ☐ other (5)

(3): (5):

(1) Essential safety requirement
(2) HC = horizontal committee
(3) N° of CEN/TC (Secretary & Chairman)
(4) EEC Standing Committee 89/392
(5) To be specified

	CO-ORDINATION OF NOTIFIED BODIES **PPE-Directive 89/686/EEC + amendments** **RECOMMENDATION FOR USE**	CNB/P/11.041 Revision 02 Language: E

Number of pages: 1	Date: 17.10.2012	Approval by : Approved on :
Origin : Vertical Group 11 'Protection against Falls from a Height'		☒ Vertical Group 17.10.2012 ☒ Horizontal Committee 17.06.2013 ☒ Standing Committee 19.09.2015

Question related to: Directive 89/686/EEC Annex: Article: 10	EN/prEN: EN 795:2012 - type B Clause:	Other:

Key words:

vacuum anchor point

Question:

Is an anchor device attached to a structure by vacuum pressure considered as PPE.

Solution:

Yes - Anchor devices attached to structure by vacuum pressure should be tested to EN 795:2012 as type B device

Sent for information to: ☒ members of the VG ☐ other(s) VG ☒ HC (2) ☒ TC (3) ☒ SC (4) ☐ other (5)

(3): (5):

(1) Essential safety requirement
(2) HC = horizontal committee
(3) N° of CEN/TC (Secretary & Chairman)
(4) EEC Standing Committee 89/392
(5) To be specified

	CO-ORDINATION OF NOTIFIED BODIES **PPE-Directive 89/686/EEC + amendments** **RECOMMENDATION FOR USE**	CNB/P/11.042 Revision 03 Language: E

Number of pages: 1	Date: 26.11.2004	Approval by : Approved on :
Origin : Vertical Group 11 'Protection against Falls from a Height'		☒ Vertical Group 24.11.2005 ☒ Horizontal Committee 08.10.2012 ☒ Standing Committee 12.03.2013

Question related to: Directive 89/686/EEC	EN/prEN: EN 353 parts 1&2:2002	Other:
Annex: Article: 10	Clause:	

Key words:

guided Type Fall Arrester - Incorrect attachment and use

Question:

1) Guided type fall arresters can be provided with a locking device or can travel freely along the anchor line in one direction only (normally upwards). The release function/button of the fall arrester must be operated by hand. This may prevent the fall arrest function from working – What kind of warning shall be included in the instructions for use of such fall arresters?

2) There are safety concerns associated with the use of guided type fall arresters for work positioning purposes – What kind of warning should be included within the manufacturer's user instructions?

3) There are safety concerns associated with the use of incorrect/unsuitable harness attachment points and connections when used in conjunction with guided type fall arresters – What kind of warning should be included within the manufacturer's user instructions?

Solution:

1) The instructions for use shall include a warning that the release function/button must only be operated when the user is in no danger of falling (i.e. they have a safe hand).

2) The instructions for use shall confirm whether or not the system can be used for work positioning purposes.

3) The instructions for use shall indicate the requirements for attachment to a full body harness (e.g. high or low relative to the sternum) and a warning that the intended connection between the user and safety line/rail should not be extended in length (e.g. with an additional connector or lanyard).

Sent for information to: ☒ members of the VG ☐ other(s) VG ☒ HC (2) ☐ TC (3) ☒ SC (4) ☐ other (5)

(3): (5):

(1) Essential safety requirement
(2) HC = horizontal committee
(3) N° of CEN/TC (Secretary & Chairman)
(4) EEC Standing Committee 89/392
(5) To be specified

	CO-ORDINATION OF NOTIFIED BODIES **PPE-Directive 89/686/EEC + amendments** **RECOMMENDATION FOR USE**	CNB/P/11.043 Revision 02 Language: E

Number of pages: 1	Date: 19.10.2001	Approval by : Approved on :
Origin : Vertical Group 11 'Protection against Falls from a Height'		☒ Vertical Group 24.11.2005 ☒ Horizontal Committee 08.10.2012 ☒ Standing Committee 12.03.2013

Question related to: Directive 89/686/EEC Annex: Article:	EN/prEN: EN 361:2002, EN 358:1999 Clause:	Other:

Key words:

back support; full body harness; waist belt; work positioning elements

Question:

Must a full body harness including work positioning elements have a waist belt or back support?

Solution:

There is no need of a waist belt or back support if the force is applied to the user's body in a way that provides the similar comfort.

Sent for information to: ☒ members of the VG ☐ other(s) VG ☒ HC (2) ☐ TC (3) ☒ SC (4) ☐ other (5)

(3): (5):

(1) Essential safety requirement
(2) HC = horizontal committee
(3) N° of CEN/TC (Secretary & Chairman)
(4) EEC Standing Committee 89/392
(5) To be specified

	CO-ORDINATION OF NOTIFIED BODIES **PPE-Directive 89/686/EEC + amendments** **RECOMMENDATION FOR USE**	CNB/P/11.049 Revision 01 Language: E

Number of pages: 1	Date: 19.10.2001	Approval by : Approved on :
Origin : Vertical Group 11 'Protection against Falls from a Height'		☒ Vertical Group 19.10.2001 ☒ Horizontal Committee 08.10.2012 ☒ Standing Committee 12.03.2013

Question related to: Directive 89/686/EEC Annex: Article:	EN/prEN: 1891:1998 Clause:	Other:

Key words:

low stretch kernmantel ropes; diameter

Question:

Shall the requirement of 8,5 mm for the diameter of low stretch kernmantel ropes be strictly fulfilled?

Solution:

No, the minimum diameter shall be 8,5 mm or of a value giving the equivalent safety.

Sent for information to: ☒ members of the VG ☐ other(s) VG ☒ HC (2) ☐ TC (3) ☒ SC (4) ☐ other (5)

(3): (5):

(1) Essential safety requirement
(2) HC = horizontal committee
(3) N° of CEN/TC (Secretary & Chairman)
(4) EEC Standing Committee 89/392
(5) To be specified

	CO-ORDINATION OF NOTIFIED BODIES **PPE-Directive 89/686/EEC + amendments** **RECOMMENDATION FOR USE**	CNB/P/11.050 Revision 03 Language: E

Number of pages: 1	Date: 23.10.2008	Approval by : Approved on :
Origin : Vertical Group 11 'Protection against Falls from a Height'		☒ Vertical Group 11.11.2009 ☒ Horizontal Committee 08.10.2012 ☒ Standing Committee 12.03.2013

Question related to: Directive 89/686/EEC	EN/prEN: 353-2:2002	Other:
Annex: Article:	Clause: 4.4.2	

Key words:

guided type fall arrester including a flexible anchor line; static strength

Question:

How should the static test be carried out under EN353-2 ?

1/ Should the static test include the whole system (e.g flexible anchor line specified by the manufacturer and the fall arrester)?

2/ Should the device be loaded through the fall arrester attachment eye/lanyard/connector?

3/ What is the static strength a guided type fall arrester including a flexible anchor line shall resist, if it is provided with a connector only, no lanyard?

Solution:

1/ Yes – The test should be carried out to provide a strength test of the whole system (using the flexible anchor line specified by the manufacturer). If the fall arrester slips on the flexible anchor line during the static load, apply a stopper device, for example as end stop or as described in EN 12841:2006

2/ Yes – The device should be loaded through the attachment eye/lanyard/connector as per normal use

3/ The guided type fall arrester together with its connector shall withstand a strength of 15 kN. The testing shall be carried out in accordance with EN 353-2:2002, clause 5.2.2.2, but without a lanyard.

Sent for information to: ☒ members of the VG ☐ other(s) VG ☒ HC (2) ☒ TC (3) ☒ SC (4) ☐ other (5)

(3): (5):

(1) Essential safety requirement
(2) HC = horizontal committee
(3) N° of CEN/TC (Secretary & Chairman)
(4) EEC Standing Committee 89/392
(5) To be specified

	CO-ORDINATION OF NOTIFIED BODIES **PPE-Directive 89/686/EEC + amendments** **RECOMMENDATION FOR USE**	CNB/P/11.051 Revision 02 Language: E

Number of pages: 1	Date: 13/10/2011	Approval by : Approved on :
Origin : Vertical Group 11 'Protection against Falls from a Height'		☒ Vertical Group 13/10/2011 ☒ Horizontal Committee 08/10/2012 ☒ Standing Committee 12/03/2013

Question related to: Directive 89/686/EEC Annex: Article: 10	EN/prEN: EN 361:2002 and others Clause:	Other:

Key words:

textile materials for PPE against fall from height

Question:

Which kind of textile materials is acceptable for use in the webbing of a full body harness or other personal protective equipment against falls from a height and which is not?

Solution:

1. polyamide 100% - **acceptable**
2. polyester 100% - **acceptable**
3. mixture of polyamide and polyester fibres - **acceptable**
4. aramid 100% - **not acceptable**
5. polyethylene made of mono filament fibres- **not acceptable**
6. polyethylene made of multifilament fibres of high tenacity – **acceptable** but the low melting point (140°C) shall be taken into account
7. polypropylene – **acceptable** (providing it has suitable UV resistance assessed in accordance with EN 1263:2002)
8. aramid coated with polyamide or polyester - **acceptable** if additional indications are included in the instructions for use (inspection, ageing, wear etc.)
9. polypropylene coated with polyamide or polyester - **acceptable** if additional indications are included in the instructions for use (inspection, ageing, wear etc.)
10. polyamide or polyester with elastic yarn - **acceptable**, but the test institute shall carefully examine its resistance in static and dynamic testing and carry out a suspension test

Sent for information to: ☒ members of the VG ☐ other(s) VG ☒ HC (2) ☒ TC (3) ☒ SC (4) ☐ other (5)

(3): (5):

(1) Essential safety requirement
(2) HC = horizontal committee
(3) N° of CEN/TC (Secretary & Chairman)
(4) EEC Standing Committee 89/392
(5) To be specified

	CO-ORDINATION OF NOTIFIED BODIES **PPE-Directive 89/686/EEC + amendments** **RECOMMENDATION FOR USE**	CNB/P/11.053 Revision 01 Language: E

Number of pages: 1	Date: 26.11.2004	Approval by : Approved on :
Origin : Vertical Group 11 'Protection against Falls from a Height'		☒ Vertical Group 26.11.2004 ☒ Horizontal Committee 08.10.2012 ☒ Standing Committee 12.03.2013

Question related to: Directive 89/686/EEC Annex: Article: 10	EN/prEN: 361:2002 Clause:	Other:

Key words:

full body harness: front loops

Question:

Who is responsible for using the right connector to form the front attachment point of a full body harness which comprises two attachment elements e. g. webbing loops or D rings?

Solution:

The manufacturer is responsible to specify exactly the type of connector e. g. type / model which should be detailed within the PPE user instructions.

If the manufacturer supplies a connector with the harness, the connector will be tested statically to EN 361:2002 in the most unfavourable axis, while attached to the harness

Sent for information to: ☒ members of the VG ☐ other(s) VG ☒ HC (2) ☒ TC (3) ☒ SC (4) ☐ other (5)

(3): (5):

(1) Essential safety requirement
(2) HC = horizontal committee
(3) N° of CEN/TC (Secretary & Chairman)
(4) EEC Standing Committee 89/392
(5) To be specified

	CO-ORDINATION OF NOTIFIED BODIES **PPE-Directive 89/686/EEC + amendments** **RECOMMENDATION FOR USE**	CNB/P/11.054 Revision 07 Language: E

Number of pages: 4	Date: 17.10.2012	Approval by : Approved on :
Origin : VG 11 – Protection against fall from a height		☒ Vertical Group 17.10.2012 ☒ Horizontal Committee 17.06.2013 ☒ Standing Committee 19.09.2015

Question related to: Directive 89/686/EEC Annex: Article:	EN/prEN: 360 Clause:	Other:

Key words:

horizontal use; retractable type fall arrester; **sharp edge (type B)** test

Question:

What tests are necessary for retractable type fall arresters intended for horizontal use over a sharp edge?

Solution:

1. Preliminary note:

The principles for testing relate to the optional test of retractable type fall arresters. It is presumed that the anchor point of the retractable type fall arrester is not situated lower than the standing user.. Testing will be done over a steel edge made of a sharp-edged drawn square steel bar without radii.

2. General requirements:

The retractable type fall arrester shall comply with the requirements in accordance with EN 360:2002.

3. Additional requirements:

3.1 Locking in a horizontal arrangement
3.2 Locking in a horizontal arrangement following optional conditioning
3.3 Dynamic performance in a horizontal arrangement when loaded over the edge
3.4 Dynamic strength in a horizontal arrangement when loaded over a the edge
3.5 Static strength in a horizontal arrangement when loaded over the edge

Sent for information to:	☒ members of the VG	☐ other(s) VG	☒ HC (2)	☐ TC (3)	☒ SC (4)	☐ other (5)
	(3):		(5):			

(1) Essential safety requirement
(2) HC = horizontal committee
(3) N° of CEN/TC (Secretary & Chairman)
(4) EEC Standing Committee 89/392
(5) To be specified

4. Additional tests to be carried out:

4.1 Edge to be used for testing:
For the dynamic tests, a **sharp-edged (type B)** drawn square steel bar in accordance with EN 10278:1999-12 without radii (material C 45+C orE 335 GC (ST60) pursuant to EN 10025) shall be used. The dimensions of the steel bar shall be at least 10 x ≤ 70 mm
Observe after each test the edge is still intact otherwise use a new edge

4.2 Test mass and sample lengths:
1- The test mass (steel weight as in EN 364) shall correspond to the nominal weight, but shall at least be 100 kg.
2- According to 4.4 and 4.5 requirements and figure 1, the manufacturer has to provide following samples for testing:

- Dynamic performance - perpendicular to the edge : L = 3,3m (exact value for lab: 3 354mm)
- Dynamic performance – with a lateral offset of 1.50m : L = 3,8m (exact value for lab: 3 807mm)
- Dynamic strength - perpendicular to the edge : L = 3,6m (exact value for lab: 3 606mm)
- Dynamic strength - with a lateral offset of 1.50m : L = 4,0m (exact value for lab: 4 030mm)

Nota: test lab can adjust the exact length specified between brackets on its test facility
if necessary anchor the device to a length of chain to achieve the 1.5 m offset.

4.3 Locking performance:
Horizontal arrangement of the retractable type fall arrester as specified by the manufacturer.
The lanyard is directed vertically downwards by means of a pulley, at a distance of 300 mm from the outlet.
When a mass of between 5 and 30 kg is attached to the lanyard, the retractable type fall arrester shall lock within a distance of 2.00 m.

4.4 Dynamic performance
In two drop tests, the retractable type fall arrester is submitted to a dynamic performance test in a horizontal arrangement as indicated by the manufacturer, similar to the test arrangement (see figure 1). The anchor point shall be situated at the same level as the edge used for testing. The distance between the anchor point and the edge must be 2.5 m. A new test sample may be used for each drop test. No support has to be placed below the case (except if the manufacturer specifies in its Instructions for use that the case has to be used level and give information of this support)

A first drop test is carried out perpendicularly to the edge and a second drop test with a lateral offset of 1.50 m. The drop weight is released from a height of 1.50 m and at a horizontal distance of 50 cm from the edge. The force is measured at the test mass and the arrest distance shall be determined. A clip can be placed on the retractable lanyard to avoid that the mass connector would hit the edge. This clip must be placed at its maximum extension length from the retractable type fall arrester (e.a. at 200mm).

- The determined braking force at the test mass shall not be greater than 6 kN.
- The retractable type fall arrester shall hold the test mass.

Both dynamic performance shall be carried out at the end stop with the full lanyard being withdrawn from the device. For this purpose, the lanyard provided by the manufacturer together with the retractable type fall arrester shall have an adequate length (Cf. to 4.2).

4.5 Dynamic strength
Two drop tests are carried out following the same test arrangement as described in 4.4. However, the drop height of the test mass is 2m above the edge. A new test sample may be used for each drop test.
The arrest distance and the braking force shall not be determined.

- The retractable type fall arrester shall hold the test mass.

4.6 Static strength
After the dynamic strength test, with the same test arrangement, the force applied to the lanyard is increased to 3 kN for wire ropes or 4.5 kN for textile lanyards and is maintained for 3 min.

- The lanyard shall withstand the force.

4.7 Test with non rigid anchor device
If the manufacturer claims the retractable fall arrester can be used in conjunction with a non rigid (flexible) anchor device, dynamic performance tests have to be repeated with this combination.

5. Additional information to be included in the marking:

- Advice that a horizontal use of the retractable type fall arrester over **an edge type B** is possible (pictogram if applicable).
- Advice that loading of the retractable type fall arrester over sharp edges should be avoided.

6. Additional information to be included in the instructions for use:

a) Advice that the retractable type fall arrester was tested also for horizontal use and a drop over an **type B** edge has been successfully tested.
Type B edge definition: A steel edge made of a sharp-edged drawn square steel bar in accordance with EN 10278:1999-12 without radii (material C 45+C or E 335 GC (ST60) pursuant to EN 10025). Due to this test, the equipment may be used over similar edges, as can be found e.g. trapezoidal sheet metal.

However, the following shall be considered when the equipment is used in a horizontal or transverse arrangement and a risk of a fall from a height over an edge exists:

1. If the risk assessment carried out before the start of the work shows that the edge is "very cutting" and / or "not free of sharp burrs" (such as sharp edges of broken glass etc.)
   - relevant measures shall be taken before the start of the work to prevent a drop over the edge or,
   - before the start of work, an edge protection shall be mounted or
   - the manufacturer shall be contacted.
2. The anchor point may only be situated at the same height as the edge at which a fall might occur or above the edge.
3. The required clearance below the edge at which a fall might occur shall be defined.
4. To attenuate a drop ending in a pendulum movement, the working area or lateral movements to both sides of the centre axis shall be limited to a maximum of 1.50 m. In other cases, no individual anchor points, but, e.g., class C or class D anchor devices in accordance with EN 795 shall be used.

b) Indication whether the retractable type fall arrester may be used with a class C anchor device in accordance with EN 795 with a horizontal flexible anchor line. (Note: This combination must have been submitted to EC type examination). Furthermore, the deflection of the anchor device shall be taken into account when determining the clearance required below the feet of the user. To that effect, the indications specified in the instructions for use of the anchor device shall be considered.

c) The deflection of the anchor device shall be taken into account when determining the clearance required below the feet of the user. To that effect, the indications specified in the instructions for use of the anchor device shall be considered.

d) Advice on existing risks of injury during fall arrest when the user collides with parts of building or construction during a fall over the edge.

e) Advice that, for the event of a fall over the edge, special rescue measures shall be defined and trained.

figure 1: Dynamic performance test for retractable type fall arrester in horizontal use

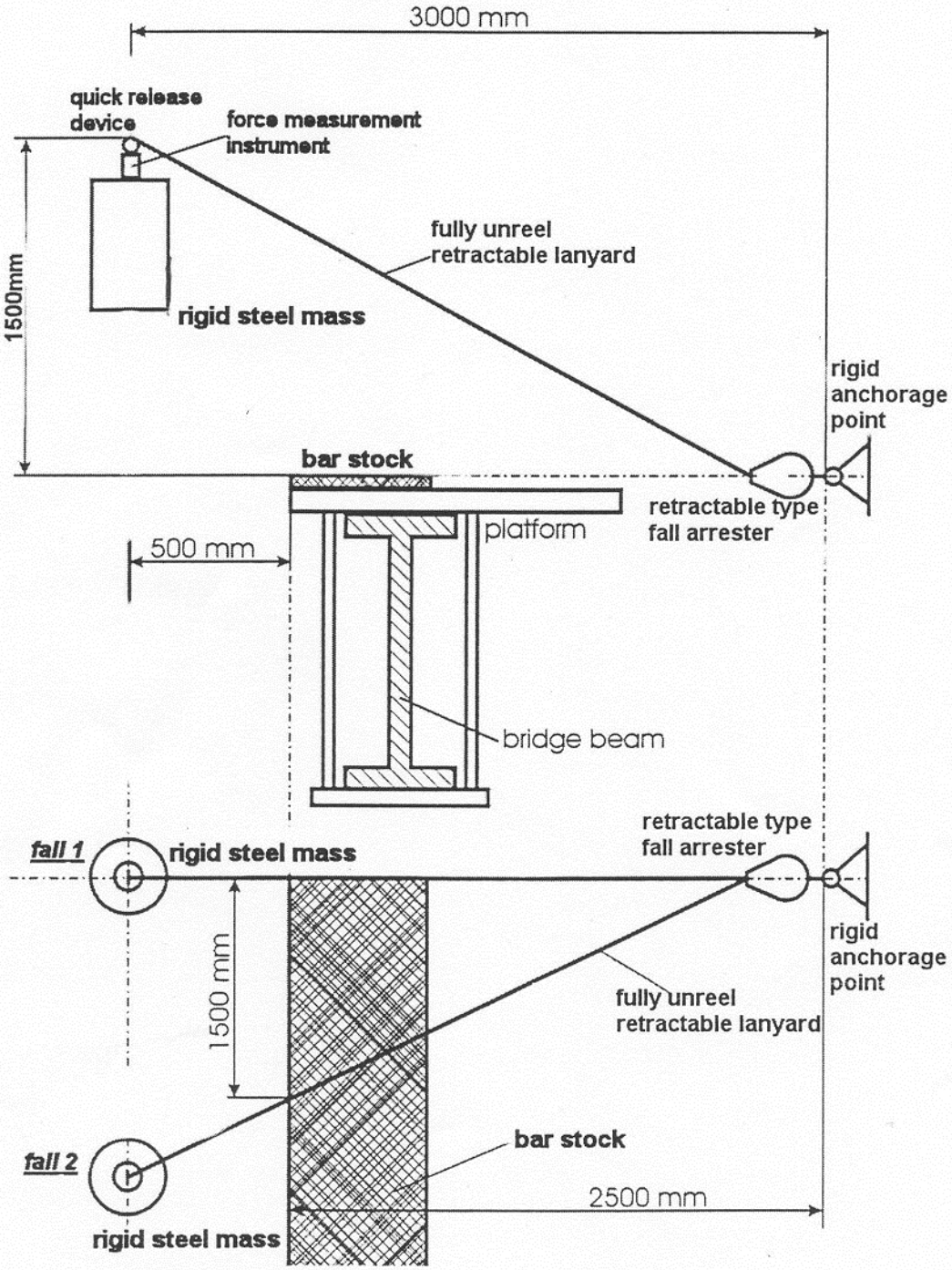

Sent for information to:	☒ members of the VG	☐ other(s) VG	☒ HC (2)	☐ TC (3)	☒ SC (4)	☐ other (5)
	(3):		(5):			

	CO-ORDINATION OF NOTIFIED BODIES **PPE-Directive 89/686/EEC + amendments** **RECOMMENDATION FOR USE**	CNB/P/11.057 Revision 01 Language: E

Number of pages: 1	Date: 26.11.2004	Approval by : Approved on :
Origin : Vertical Group 11 'Protection against Falls from a Height'		☒ Vertical Group 26.11.2004 ☒ Horizontal Committee 08.10.2012 ☒ Standing Committee 12.03.2013

Question related to: Directive 89/686/EEC Annex: Article: 10	EN/prEN: 361:2002 Clause:	Other:

Key words:

marking of fall arrest attachment points on EN 361:2002 harnesses

Question:

How could the 'A' marking appear on EN 361:2002 fall arrest attachment points?

Solution:

1) Minimum height: 10 mm

2) Letter 'A' to be no more than 50 mm from the attachment point

3) Divided attachment elements should be marked:

A/2 or 

Sent for information to: ☒ members of the VG ☐ other(s) VG ☒ HC (2) ☒ TC (3) ☒ SC (4) ☐ other (5)

(3): (5):

(1) Essential safety requirement
(2) HC = horizontal committee
(3) N° of CEN/TC (Secretary & Chairman)
(4) EEC Standing Committee 89/392
(5) To be specified

	CO-ORDINATION OF NOTIFIED BODIES **PPE-Directive 89/686/EEC + amendments** **RECOMMENDATION FOR USE**	CNB/P/11.060 Revision 07 Language: E

Number of pages : 4	Date : 17.10.2012	Approval by :	Approved on :
Origin : VG 11 Protection against Falls from a Height		☒ Vertical Group ☒ Horizontal Committee ☒ Standing Committee	.....17.10.2012 17.06.2013 19.09.2015

Question related to : Directive 89/686/EEC		EN/prEN : 360	Other :
Annex :	Article :	Clause :	

Key words :

horizontal use; retractable type fall arrester, **edge (type A) test**

Question :

What tests are necessary for retractable type fall arresters intended for horizontal use over an edge?

Recommended solution :

1. Preliminary note:
The principles for testing relate to the optional test of retractable type fall arresters. It is presumed that the anchor point of the retractable type fall arrester is not situated lower than the standing user.
2. General requirements:
The retractable type fall arrester shall comply with the requirements in accordance with EN 360:2002.

3. Additional requirements:

3.1 Locking in a horizontal arrangement
3.2 Locking in a horizontal arrangement following optional conditioning
3.3 Dynamic performance in a horizontal arrangement when loaded over an edge with an edge radius of 0.5 mm
3.4 Dynamic strength in a horizontal arrangement when loaded over an edge with an edge radius of 0.5 mm
3.5 Static strength in a horizontal arrangement when loaded over an edge with an edge radius of 0.5 mm

Sent for information to: ☒ members of the VG ☐ other(s) VG ☒ HC (2) ☒ TC (3) ☒ SC (4) ☐ other (5)
(3): (5):

(1) Essential safety requirement
(2) HC = horizontal committee
(3) N° of CEN/TC (Secretary & Chairman)
(4) EEC Standing Committee 89/392
(5) To be specified

4. Additional tests to be carried out:

4.1 Edge to be used for testing:

For the dynamic tests, **an edged (type A)** drawn square steel bar in accordance with DIN EN 10278:1999-12 (material C 45+C or E 335 GC (ST60) pursuant to EN 10025) shall be used. The dimensions of the steel bar shall be at least 10 x ≤70 mm, the edge radius (0.5 +/- 0.05) mm, the surface roughness in accordance with DIN EN ISO 1302: average surface finish Ra = 3.2 µm.

Observe after each test the edge is still intact otherwise use a new edge

4.2 Test mass and sample lengths:

1- The test mass (steel weight as in EN 364) shall correspond to the nominal weight, but shall at least be 100 kg.

2- According to 4.4 and 4.5 requirements and figure 1, the manufacturer has to provide following samples for testing:

- Dynamic performance - perpendicular to the edge : L = 3,3m (exact value for lab: 3 354mm)
- Dynamic performance – with a lateral offset of 1.50m : L = 3,8m (exact value for lab: 3 807mm)
- Dynamic strength - perpendicular to the edge : L = 3,6m (exact value for lab: 3 606mm)
- Dynamic strength - with a lateral offset of 1.50m : L = 4,0m (exact value for lab: 4 030mm)

Nota: test lab can adjust the exact length specified between brackets on its test facility

if necessary anchor the device to a length of chain to achieve the 1.5 m offset.

4.3 Locking performance:

Mount the retractable type fall arrester as indicated by the manufacturer, in a horizontal arrangement. The lanyard is directed vertically downwards by means of a pulley, at a distance of 300 mm from the outlet.

When a mass of between 5 and 30 kg is attached to the lanyard, the retractable type fall arrester shall lock within a distance of 2.00 m

4.4 Dynamic performance

In two drop tests, the retractable type fall arrester is submitted to a dynamic performance test in a horizontal arrangement as indicated by the manufacturer, similar to the test arrangement (see figure 1). The anchor point shall be situated at the same level as the edge used for testing. The distance between the anchor point and the edge must be 2.5 m. A new test sample may be used for each drop test. No support has to be placed below the case (except if the manufacturer specifies in its Instructions for use that the case has to be used level and give information of this support)

A first drop test is carried out perpendicularly to the edge and a second drop test with a lateral offset of 1.50 m. The drop weight is released from a height of 1.50 m and at a horizontal distance of 50 cm from the edge. The force is measured at the test mass and the arrest distance shall be determined. . A clip can be placed on the retractable lanyard to avoid that the mass connector would hit the edge. This clip must be placed at its maximum extension length from the retractable type fall arrester (e.a. at 200mm).

- The determined braking force at the test mass shall not be greater than 6 kN.
- The retractable type fall arrester shall hold the test mass.

Both dynamic performance shall be carried out at the end stop with the full lanyard being withdrawn from the device. For this purpose, the lanyard provided by the manufacturer together with the retractable type fall arrester shall have an adequate length (Cf. to 4.2).

4.5 Dynamic strength

Two drop tests are carried out following the same test arrangement as described in 4.4. However, the drop height of the test mass is 2m above the edge. A new test sample may be used for each drop test.

The arrest distance and the braking force are not determined.

- The retractable type fall arrester shall hold the test mass.

4.6 Static strength

After the dynamic strength test, with the same test arrangement, the force applied to the lanyard is increased to 3 kN for wire ropes or 4.5 kN for textile lanyards and is maintained for 3 min.

- The lanyard shall withstand the force.

4.7 Test with non rigid anchor device

If the manufacturer claims the retractable fall arrester can be used in conjunction with a non rigid (flexible) anchor device, dynamic performance tests have to be repeated with this combination.

5. Additional information to be included in the marking:

- Advice that a horizontal use of the retractable type fall arrester over **an edge type A**. is possible (pictogram if applicable)
- Advice that loading of the retractable type fall arrester over edges shall be avoided.

6. Additional information to be included in the instructions for use:

a) Advice that the retractable type fall arrester was tested also for horizontal use and a drop over a **Type A** edge has been successfully tested.
Type A edge definition: A steel edge with a radius of r = 0,5 mm and without burrs was used for the test. Due to this test, the equipment may be used over similar edges, as can be found e.g. at rolled steel profiles, at wooden beams or at a clad, rounded roof parapet. However, the following shall be considered when the equipment is used in a horizontal or transverse arrangement and a risk of a fall from a height over an edge exists:

1. If the risk assessment carried out before the start of the work shows that the edge is very “cutting” and / or “free of burrs” (such as in case of an unclad roof parapet, a rusty steel girder or a concrete edge)
   - relevant measures shall be taken before the start of the work to prevent a drop over the edge or,
   - before the start of work, an edge protection shall be mounted or
   - the manufacturer shall be contacted.
2. The anchor point may only be situated at the same height as the edge at which a fall might occur or above the edge.
3. The required clearance below the edge at which a fall might occur shall be defined.
4. To attenuate a drop ending in a pendulum movement, the working area or lateral movements to both sides of the centre axis shall be limited to a maximum of 1.50 m. In other cases, no individual anchor points, but, e.g., class C or class D anchor devices in accordance with EN 795 shall be used.

b) Indication whether the retractable type fall arrester may be used with a class C anchor device in accordance with EN 795 with a horizontal flexible anchor line. (Note: This combination must have been submitted to EC type examination). Furthermore, the deflection of the anchor device shall be taken into account when determining the clearance required below the feet of the user. To that effect, the indications specified in the instructions for use of the anchor device shall be considered.

c) The deflection of the anchor device shall be taken into account when determining the clearance required below the feet of the user. To that effect, the indications specified in the instructions for use of the anchor device shall be considered.

d) Advice on existing risks of injury during fall arrest when the user collides with parts of building or construction during a fall over the edge.

e) Advice that, for the event of a fall over the edge, special rescue measures shall be defined and trained.

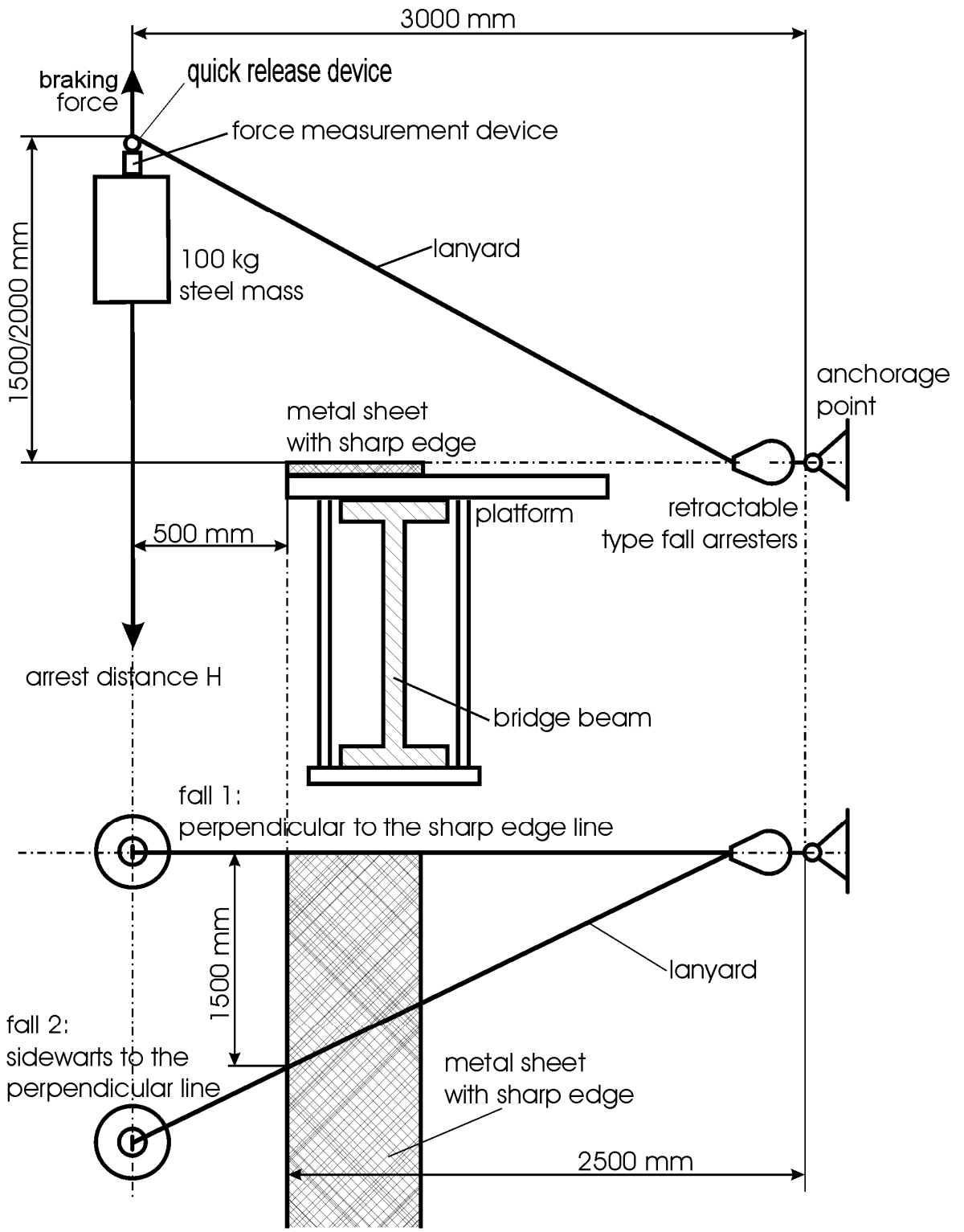

Figure 1: Dynamic performance test for retractable type fall arrester in horizontal use

(1) Essential safety requirement
(2) HC = horizontal committee
(3) N° of CEN/TC (Secretary & Chairman)
(4) EEC Standing Committee 89/392
(5) To be specified

	CO-ORDINATION OF NOTIFIED BODIES **PPE-Directive 89/686/EEC + amendments** **RECOMMENDATION FOR USE**	CNB/P/11.061 Revision 03 Language: E

Number of pages: 2	Date: 25.10.2007	Approval by :	Approved on :
Origin : Vertical Group 11 'Protection against Falls from a Height'		☒ Vertical Group ☒ Horizontal Committee ☒ Standing Committee	11.11.2009 08.10.2012 12.03.2013

Question related to: Directive 89/686/EEC	EN/prEN: 795:1996/A1:2000	Other:
Annex: Article:	Clause:	

Key words: Test methodology used for EN 795 class B - temporary lifeline

Question: How to test EN 795 class B - temporary lifeline?

Solution:

1- Type of PPE

Could be defined as:

- Anchor device EN 795
- Transportable and temporary – so Class B
- Horizontal use with length adjuster

As class B, and according to JOUE 2/2000, this is a PPE

2- How to test it

Test have to be carried out with traveller specified by the manufacturer

Where possible test the maximum and minimum spans. Where this is not possible test the minimum and at least one other span.

For all tests ensure the manufacture has predicted the end load and the maximum deflection within 20% of the measured values.

> Dynamic test

As EN 795 class B but with 2 tests in the mid-span of the line

Requirement: keep the mass + measure deflection of the rope/webbing

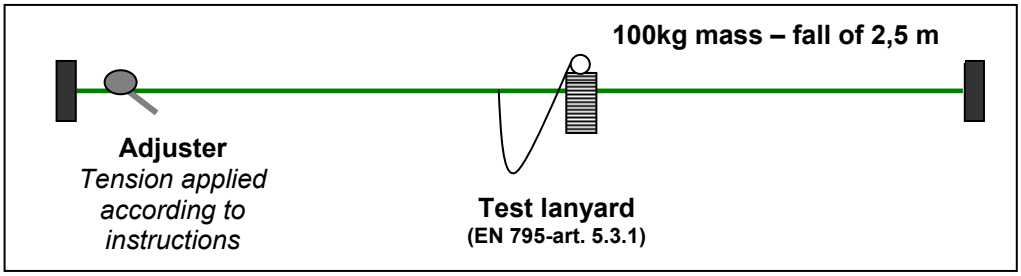

Measure strength on one end (tension of adjuster, during fall) , on attachment point and maximum deflection.

(1) Essential safety requirement
(2) HC = horizontal committee
(3) N° of CEN/TC (Secretary & Chairman)
(4) EEC Standing Committee 89/392
(5) To be specified

Solution:

> Static test
As EN 795 class B but with 2 tests in the mid-span of the line

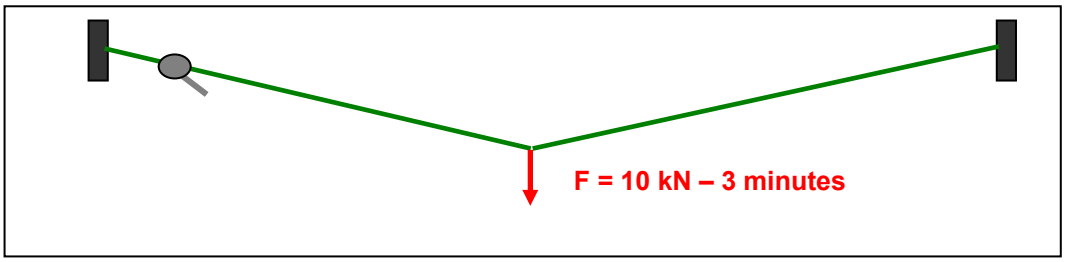

> more than 1 person: not PPE
Static: F= 10 + 1 kN per person (ea: 11kN for 2,…)

> Instructions for use
Instructions shall include following information:

- This equipment is only for temporary use
- The minimum clearance below the user/s, according to deflection measurements
- Strength measured during test on ends for minimum and maximum span
- Recommended minimum anchor strength (including safety factor of 2)
- In case of horizontal use, recommended distance of anchor line to the edge
- how to obtain and check the good tension on the lifeline

	CO-ORDINATION OF NOTIFIED BODIES **PPE-Directive 89/686/EEC + amendments** **RECOMMENDATION FOR USE**	CNB/P/11.062 Revision 02 Language: E

Number of pages: 1	Date: 23.10.2008	Approval by : Approved on :
Origin : Vertical Group 11 'Protection against Falls from a Height'		☒ Vertical Group 23.10.2008 ☒ Horizontal Committee 08.10.2012 ☒ Standing Committee 12.03.2013

Question related to: Directive 89/686/EEC Annex: Article: 10	EN/prEN: EN355; EN360, EN353-1 and EN353-2 Clause:	Other:

Key words:

Testing with higher loads

Question: How shall following PPE tested when the manufacturer claims in the instructions a user weight greater than the standard 100 kg?

Energy absorber (EN355); Fall arrester type (EN360), Guided type including a rigid anchorage line (EN353-1) and Guided type including a flexible anchorage line (353-2)

Recommended Solution:

These equipment tested dynamically based on relevant standard with standard load value and with value manufacturer gives. Values of standard have to be met.

Note: in absence of specified user weight test will be carried out with the standard 100kg

Sent for information to: ☒ members of the VG ☐ other(s) VG ☒ HC (2) ☒ TC (3) ☒ SC (4) ☐ other (5)

(3): (5):

(1) Essential safety requirement
(2) HC = horizontal committee
(3) N° of CEN/TC (Secretary & Chairman)
(4) EEC Standing Committee 89/392
(5) To be specified

	CO-ORDINATION OF NOTIFIED BODIES **PPE-Directive 89/686/EEC + amendments** **RECOMMENDATION FOR USE**	CNB/P/11.063 Revision 02 Language: E

Number of pages : 1	Date : **17/10/2011**	Approval by :	Approved on :
Origin : VG11, Protection against falls from a height		☒ Vertical Group..... ☒ Horizontal Committee ..... ☒ Standing Committee	17/10/2012 17/06/2013 19/09/2015
Question related to : Directive 89/686/EC		EN/prEN : EN 355:2002	Other :
Annex :	Article : 10	Clause :	
Key words : Energy absorber - static test			

Question :

What test method should be used to carry out static test on energy absorber including an integral lanyard?

Solution:

. Energy absorber including an integral (incorporated/ inseparable) lanyard shall be tested according to following methods:

Note 1 : Each test shall be performed using a new sample
Note 2: requirements apply to both fixed and adjustable lanyard

1. **Static-Test for incorporated lanyard/s energy absorbers**

   If the energy absorber is incorporated in a lanyard, the lanyard part shall be tested according to EN 354:2010. art 4.5

Note 3: twin tail energy absorbers shall be 'c-c' tested at 22kN (see 4.5 and 5.7.2.3 of EN 354:2010) whatever the design (independent or linked tail)

2. **Static-Test – 3-points loading test for twin tail energy absorbers**

A 3-point test shall be performed starting with a situation as given in figure on the right. The legs shall be adjusted initially in line with no slack. The energy absorbing element shall be positioned perpendicular to the line of the legs. A static load of 9 kN shall be applied for 3 minutes at the attachment point of the energy absorbing element while the attachment points of the twin tail lanyards are fixed. The energy absorbing element/twin tail lanyards-system shall sustain the static load of 9 kN without failure.

Note: The 9 kN test force is based on a safety factor of 1.5 on the 6 kN maximum force likely to be applied in use. Due to the force amplification effect in the legs, a 15 kN force is not considered necessary

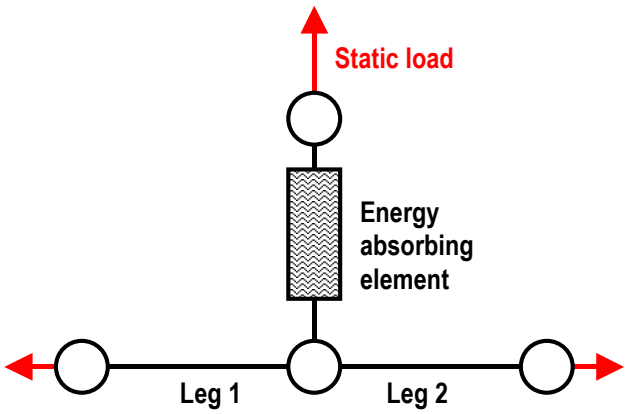

Figure: 3-point test with legs at start in line, perpendicular energy absorbing element

Sent for information to:	☒ members of the VG	☐ other(s) VG	☒ HC (2)	☒ TC (3)	☒ SC (4)	☐ other (5)
	(3):		(5):			

(1) Essential safety requirement
(2) HC = horizontal committee
(3) N° of CEN/TC (Secretary & Chairman)
(4) EEC Standing Committee 89/392
(5) To be specified

	CO-ORDINATION OF NOTIFIED BODIES **PPE-Directive 89/686/EEC + amendments** **RECOMMENDATION FOR USE**	CNB/P/11.064 Revision 01 Language: E

Number of pages: 1	Date: 25.10.2007	Approval by :	Approved on :
Origin : Vertical Group 11 'Protection against Falls from a Height'		☒ Vertical Group ☒ Horizontal Committee ☒ Standing Committee	25.10.2007 08.10.2012 12.03.2013

Question related to: Annex: Article:	EN/prEN: 353:2002 Clause:	Other:

Key words:
different fall arrestors for fall arrest systems

Question:
Question : Is it possible to certify a vertical fall arrest system where the mobile anchor device (i.e. fall arrester) is supplied to the end user by a different company to the one that originally supplied and installed the cable and anchor brackets.

Solution:
Certification can only be based on the combinations of equipment that have been tested to and passed the requirements of the standard. The end user must take responsibility to ensure that only certified combinations are used.

Sent for information to :	☒ members of the VG ☐ other(s) VG (3): ☒ HC (2) ☒ TC (3) (5): ☒ SC (4) ☐ other (5)

(1) Essential safety requirement
(2) HC = horizontal committee
(3) N° of CEN/TC (Secretary & Chairman)
(4) EEC Standing Committee 89/392
(5) To be specified

	CO-ORDINATION OF NOTIFIED BODIES **PPE-Directive 89/686/EEC + amendments** **RECOMMENDATION FOR USE**	CNB/P/11.067 Revision 01 Language : E

Number of pages : 1	Date : 25.10.2007	Approval by :	Approved on :
Origin : VG11 Protection against Falls from a Height		☑ Vertical Group	.....23.10.2008
		☑ Horizontal Committee	.....08.10.2012
		☑ Standing Committee	.....12.03.2013

Question related to :TC 136	EN/prEN : 568	Other :
Annex : Article :	Clause :§ 4.2.4.3.	

Key words :

Ice anchors, Resistance to fracture

Question :

What kind of material could be used for the resistance to fracture and holding power of ice anchors instead of the ice type 2 defined in EN 568?

Solution :

The block of ice type 2 can be alternatively replaced by a block of cellular concrete with following characteristic :

- Material : cellular concrete
- Density : 550 kg/m^3 +25/-35 kg/m^3
- Compressive strength : 4.5 MPa ± 0.25 MPa
- Minimum dimensions : Width : 200 mm, Height : 400 mm, Depth : 250 mm
- High, low, left and right faces have to be held with metal plates to avoid cracks
- The temperature treatment for the test has to be analogue to ice type 2

All other requirements of the standard still apply for this test

Sent for information to : ☑ members of the VG ☐ other(s) VG ☑ HC (2) ☑ TC (3) ☑ SC (4) ☐ other (5)

(1) Essential safety requirement
(2) HC = horizontal committee
(3) N° of CEN/TC (Secretary & Chairman)
(4) EEC Standing Committee 89/392
(5) To be specified

	CO-ORDINATION OF NOTIFIED BODIES **PPE-Directive 89/686/EEC + amendments** **RECOMMENDATION FOR USE**	CNB/P/11.068 Revision 01 Language: E

Number of pages: 1	Date: 23.10.2008	Approval by : Approved on :
Origin : Vertical Group 11 'Protection against Falls from a Height'		☒ Vertical Group 11.11.2009 ☒ Horizontal Committee 08.10.2012 ☒ Standing Committee 12.03.2013

Question related to: Directive 89/686/EEC Annex: Article:	EN/prEN: 12278:2007 Clause: 4.2	Other:

Key words:

Pulley, sheaves, static strength test

Question:

How to test pulleys with more than one sheave when they are not intended for individual use?

Solution:

When not intended to be used individually they shall be tested together as per in use.

Sent for information to: ☒ members of the VG ☐ other(s) VG ☒ HC (2) ☒ TC (3) ☒ SC (4) ☐ other (5)

(3): (5):

(1) Essential safety requirement
(2) HC = horizontal committee
(3) N° of CEN/TC (Secretary & Chairman)
(4) EEC Standing Committee 89/392
(5) To be specified

	CO-ORDINATION OF NOTIFIED BODIES **PPE-Directive 89/686/EEC + amendments** **RECOMMENDATION FOR USE**	CNB/P/11.069 Revision 02 Language: E

Number of pages: 1	Date: 23.10.2008	Approval by : Approved on :
Origin : Vertical Group 11 'Protection against Falls from a Height'		☒ Vertical Group 11.11.2009 ☒ Horizontal Committee 08.10.2012 ☒ Standing Committee 12.03.2013

Question related to: Directive 89/686/EEC Annex: Article:	EN/prEN: 361 :2002,… Clause: 4.2	Other:

Key words:

Synthetic fibre, breaking tenacity

Question:

How to confirm breaking tenacity of synthetic fibre as 0,6 N/tex ?

Solution:

VG11 members require confirmation (e.g. certificate of conformity) in manufacturer's technical file declaring the minimum breaking tenacity of synthetic fibres as 0.6 N/tex.

Note: this requirement is not applicable to accessory straps.

Sent for information to: ☒ members of the VG ☐ other(s) VG ☒ HC (2) ☒ TC (3) ☒ SC (4) ☐ other (5)

(3): (5):

(1) Essential safety requirement
(2) HC = horizontal committee
(3) N° of CEN/TC (Secretary & Chairman)
(4) EEC Standing Committee 89/392
(5) To be specified

	CO-ORDINATION OF NOTIFIED BODIES **PPE-Directive 89/686/EEC + amendments** **RECOMMENDATION FOR USE**	CNB/P/11.070 Revision 01 Language: E

Number of pages: 1	Date: 23.10.2008	Approval by : Approved on :
Origin : Vertical Group 11 'Protection against Falls from a Height'		☒ Vertical Group 12.11.2009 ☒ Horizontal Committee 08.10.2012 ☒ Standing Committee 12.03.2013

Question related to: Directive 89/686/EEC Annex: Article:	EN/prEN: 15567-1 :2007 Clause:	Other:

Key words:

Rope, zip wire, tyrolean activity

Question:

Are ropes designed for 'zip wire' activity (also named as 'tyrolean') PPE ?

Nota: zip wire: recreational activity in which the participant glides under gravity on a rope (or a wire cable)

Solution:

No, this type of product is not considered PPE and therefore not subject to the CE approval process.

However, the use of this product is defined as a 'zip wire', covered by EN15567-1:2007 (ropes courses standard)

Sent for information to: ☒ members of the VG ☐ other(s) VG ☒ HC (2) ☒ TC (3) ☒ SC (4) ☐ other (5)

(3): (5):

(1) Essential safety requirement
(2) HC = horizontal committee
(3) N° of CEN/TC (Secretary & Chairman)
(4) EEC Standing Committee 89/392
(5) To be specified

	CO-ORDINATION OF NOTIFIED BODIES **PPE-Directive 89/686/EEC + amendments** **RECOMMENDATION FOR USE**	CNB/P/11.071 Revision 02 Language: E

Number of pages : 1	Date : 11/11/2009	Approval by :	Approved on :
Origin : VG11, Protection against falls from a height		☒ Vertical Group ..... ☒ Horizontal Committee..... ☒ Standing Committee.....	13/10/2010 08/10/2012 12/03/2013
Question related to : Directive 89/686/EC		EN/prEN : EN 358	Other :
Annex :	Article : 10	Clause :	

Key words : Restrain lanyard, belt, category

Question :

Are restrain equipment (lanyard and/or belt) PPE?

Solution:

Yes, restrain equipment (lanyard and/or belt) are PPE against fall from a height category 3.

They shall be tested according to EN 358:1999 as work positioning equipment (lanyard and/or belt)

Instructions for use shall specify that it is for restrain system only and should not be used with free fall or slack.

Sent for information to: ☒ members of the VG ☐ other(s) VG ☒ HC (2) ☒ TC (3) ☒ SC (4) ☐ other (5)

(3): (5):

(1) Essential safety requirement
(2) HC = horizontal committee
(3) N° of CEN/TC (Secretary & Chairman)
(4) EEC Standing Committee 89/392
(5) To be specified

	CO-ORDINATION OF NOTIFIED BODIES **PPE-Directive 89/686/EEC + amendments** **RECOMMENDATION FOR USE**	CNB/P/11.072 Revision 01 Language: E

Number of pages : 1	Date : **12/10/2011**	Approval by :	Approved on :
Origin : VG11, Protection against falls from a height		☒ Vertical Group..... ☒ Horizontal Committee ..... ☒ Standing Committee	12/10/2011 08/10/2012 12/03/2013

Question related to : Directive 89/686/EC		EN/prEN : EN 813	Other :
Annex :	Article : 10	Clause :	

Key words : work positioning, dynamic test, torso dummy

Question :

How to consider EN 813 dynamic test result when the specified type of rigid dummy slips out of the PPE after rebounds, which do not take place in reality?

Solution:

VG11 consider only the first impact as important for assessing compliance.

Sent for information to: ☒ members of the VG ☐ other(s) VG ☒ HC (2) ☒ TC (3) ☒ SC (4) ☐ other (5)

(3): (5):

(1) Essential safety requirement
(2) HC = horizontal committee
(3) N° of CEN/TC (Secretary & Chairman)
(4) EEC Standing Committee 89/392
(5) To be specified

	CO-ORDINATION OF NOTIFIED BODIES **PPE-Directive 89/686/EEC + amendments** **RECOMMENDATION FOR USE**	CNB/P/11.073 Revision 02 Language: E

Number of pages: 13	Date: 13/10/2010	Approval by : Approved on : ☒ Vertical Group 13/10/2010 ☒ Horizontal Committee 08/10/2012 ☒ Standing Committee 12/03/2013
Origin : VG11, Protection against falls from a height		

Question related to: Annex: Article: 10	EN/prEN: EN 353-1 Clause:	Other:

Key words: EN 353-1, withdrawal of harmonized list, back fall test, sideway fall

Question:

How to assess guided type fall arrester including a rigid anchor line after the withdrawal of EN 353-1:2002 from PPE standards harmonised list ?

Proposed solution:

The EU OJ dated 23.3.2010 withdrew the presumption of conformity of EN 353-1:2002, because the basic health and safety requirements of clauses 1.1.1, 1.4 and 3.1.2.2 of Annex II to Directive 89/686/EEC are not considered to be satisfied by the standard.

The European Coordination of Notified Bodies for PPE against fall from a height VG11 has approved on its 20th meeting (October 2010) the following decisions:

1- Notified Bodies cannot anymore issue EC type examination certificates based solely on EN 353-1:2002

2- For recertification of product (or modified or new product) Notified bodies shall follow requirements described in following pages.

Sent for information to: ☒ members of the VG ☐ other(s) VG ☒ HC (2) ☒ TC (3) ☒ SC (4) ☐ other (5)

(3): (5):

(1) Essential safety requirement
(2) HC = horizontal committee
(3) N° of CEN/TC (Secretary & Chairman)
(4) EEC Standing Committee 89/392
(5) To be specified

Requirements and test procedure for Guided type fall arresters including a rigid anchor line

Preliminary remarks:
1- All requirements of EN 353-1:2002 have to be applied
2- Applicable articles coming from prEN 353-1:2008 listed in the table are detailed after the table on annexe 1
3- Applicable articles coming from CEN/TC160/WG2 N446 listed in the table are detailed after the table on annexe 2

Design, ergonomics, material and construction			
	EN 353-1:2002	**From prEN 353-1:2008**	**From WG2 N446 report**
General	**4.1 and 4.2**	**4.1**	
End Stop A *The guided type fall arrester does not become detached unintentionally*		**4.1.2** **5.1**	
End Stop B *Has to stop the gtfa under load*		**4.1.2** **5.1**	
End Stops *Shall be designed so that they may only be opened by deliberate manual action*		**4.1.2** **5.1**	
Connecting Element(s) *Shall be permanently attached to the guided type fall arrester*		**4.1.2** **5.1**	
Guided type fall arrester *Shall be capable of accompanying the user during upward and downward changes of position without requiring manual intervention*		**4.1.2** **5.1**	
Locking			
	EN 353-1:2002	**From prEN 353-1:2008**	**From WG2 N446 report**
General	**4.3** **5.1**		
Static strength			
	EN 353-1:2002	**From prEN 353-1:2008**	**From WG2 N446 report**
Energy absorber preloading		**4.2.1** **5.2.2**	
General *Rigid anchor line with the guided type fall arrester*	**4.4** **5.2**	**4.2.2.1** **5.2.2**	
Non metallic materials		**4.2.2.2** **5.2.3**	
Wire rope systems where the dynamic load on the top anchor exceeds 6kN		**4.2.2.3** **5.2.4**	
Lateral strength on the guided type fall arrester		**4.2.2.4** **5.2.5**	
End stop A		**4.2.3.1** **5.2.6.1**	
End stop B		**4.2.3.2** **5.2.6.2**	

Dynamic performance			
	EN 353-1:2002	**From prEN 353-1:2008**	**From WG2 N446 report**
Performance test	**4.5 5.3**		
Cold conditions test		**4.3.1 5.3.2**	
Orientation of the rigid anchor line		**4.3.2 5.3.3**	
Dynamic strength			
	EN 353-1:2002	**From prEN 353-1:2008**	**From WG2 N446 report**
End stop B *Has to stop the guided type fall arrester during a fall*		**4.4 5.4.2**	
Min Distance *to address the influence of the posture of the user above the guided type fall arrester*			**1 – Dmin**
Max Distance *to address the increase of the distance between the anchor line and the centre of gravity of the user*			**2 – Dmax**
Fall Back *to address the backward fall scenario*			**3 – FB**
Sideway fall *to address the sideway fall scenario*			**4 - SW**
Corrosion Resistance			
	EN 353-1:2002	**From prEN 353-1:2008**	**From WG2 N446 report**
General	**4.6 5.4**		
Marking			
	EN 353-1:2002	**From prEN 353-1:2008**	**From WG2 N446 report**
General Requirements	**4.7 6**		
Correct orientation of the guided type fall arrester		**4.5 6**	
Model and type/identification mark		**4.5 6**	

Information supplied by the manufacturer			
	EN 353-1:2002	From prEN 353-1:2008	From WG2 N446 report
General Requirements	4.7 7		
General		4.5 7.1	
Storage, cleaning, maintenance, servicing, disinfection, packaging		4.5 7.1 8	
Instruction for installation		4.5 7.2	
Instruction for use		4.5 7.3	

ANNEX 1

Relevant requirements and test methods of prEN 353-1:2008 with WG2 up-dates

3 Terms and definitions

3.10 - stop type A
stop device fitted to the rigid anchor line to prevent the guided type fall arrester from passing the device unintended during ascent or descent

3.11 - stop type B
stop fitted to the rigid anchor line to prevent the guided type fall arrester from passing the device unintended in a fall

3.12 - maximum rated load
maximum mass of the person, including tools and equipment carried, as specified by the manufacturer

4 Requirements

4.1 Materials and construction

4.1.1 Materials

4.1.1.1 A rigid anchor line shall be a rail or a wire rope. The material of a rigid anchor line made from wire rope shall be steel and its minimum diameter shall be 8 mm.

4.1.1.2 Wire ropes that are not made from stainless steel shall be galvanized in accordance with ISO 2232.

NOTE Manufacturers of guided type fall arresters including a rigid anchor line should be aware that stainless steel can be susceptible to pitting and stress corrosion cracking where chloride levels are high.

4.1.1.3 Where a ferrule is used in a termination, it shall be made from ductile metallic material.

4.1.1.4 Fibre ropes, webbing and sewing threads shall be made from virgin filament of multifilament synthetic fibres, suitable for their intended use. The braking tenacity of the synthetic fibres shall be known to be at least 0,6 N/tex.

4.1.1.5 Materials used in the guided type fall arrester, including a rigid anchor line, which may come into contact with the skin of the user, shall not be known to cause irritating or sensitization effects during intended use.

4.1.1.6 When checked in accordance with 5.1, the guided type fall arrester, including a rigid anchor line, shall have no sharp edges and burrs that may cause injury to the user.

4.1.2 Construction

4.1.2.1 The anchor line shall be so designed that it prevents any unintentional separation of the guided type fall arrester from the rigid anchor line.

4.1.2.2 The connecting element(s) shall be permanently attached to the guided type fall arrester.

4.1.2.3 A guided type fall arrester shall be capable of accompanying the user during upward and downward changes of position without requiring manual intervention.

4.1.2.4 If the guided type fall arrester is equipped with any load-bearing element made from textiles, the guided type fall arrester shall have a means of protection against environmental influences (e.g. the guided type fall arrester is removable from the rigid anchor line by the user).

4.1.2.5 When a guided type fall arrester includes non-metallic elements, e.g. an energy absorber, these elements (including extremities) shall be fully protected against abrasion.

4.1.2.6 If the guided type fall arrester is removable by the user from the rigid anchor line, other than by removing it from the ends of the anchor line, the guided type fall arrester or the rigid anchor line shall be so designed that the guided type fall arrester can only be detached by at least two consecutive deliberate manual actions.

4.1.2.7 End stops shall be designed so that they may only be opened by deliberate manual action.

4.1.2.8 Connectors used in or as a connecting element shall conform to EN 362.

4.2 Static strength

4.2.1 Energy absorber preloading

If any part of the guided type fall arrester including the rigid anchor line is fitted with an energy absorber then the energy absorber shall be tested in accordance with 5.2.2. The permanent extension caused by activation of an energy absorber after pre-loading with 2 kN shall not be greater than 50 mm *(value to be updated depending on WG2 decision)*

4.2.2 Guided type fall arrester including rigid anchor line

4.2.2.1 When tested in accordance with 5.2.2, the rigid anchor line with the attached guided type fall arrester shall sustain a force of ($15^{+0,2}_{0}$) kN.

4.2.2.2 If any load-bearing element of the rigid anchor line e.g; energy absorber is made from non-metallic materials, then those parts shall sustain a force of ($22^{+0,2}_{0}$) kN when tested in accordance with 5.2.3.
If the guided type fall arrester remains permanently connected to the rigid anchor line, includes non-metallic load bearing elements and cannot be stored in accordance with the information supplied by the manufacturer, non metallic elements shall also sustain a force of ($22^{+0,2}_{0}$) kN when tested in accordance with 5.2.3 (if the guided type fall arrester can be removed it shall sustain a load of 15kN).

NOTE The synthetic materials may be tested as part of the total system or be isolated from the metallic parts.

4.2.2.3 For rigid anchor lines made from wire rope that have been tested in accordance with 5.3 of EN 353-1:2002 and have a peak load at the top anchor greater than 6 kN, the wire rope and all other elements from the top of the anchor line e.g. an energy absorber, but excluding the guided type fall arrester, shall be tested in accordance with 5.2.4 and shall hold a load of 2,5 times ($^{+0,2}_{0}$) kN that maximum peak recorded load

4.2.2.4 When tested in accordance with 5.2.5 the rigid anchor line with the attached guided type fall arrester shall sustain a force of 1 (0, +0,2) kN without releasing the guided type fall arrester. After the test the rigid anchor line shall not present a permanent deformation such that the normal functioning of the guided type fall arrester is impaired

Comment: objective is to avoid guided type fall arrester to be detached from the rigid anchor line with a lateral movement

4.2.3 End stops

4.2.3.1 When tested in accordance with 5.2.6.1, stops type A shall hold a load of ($2^{+0,2}_{0}$) kN (deformation is acceptable).

4.2.3.2 When tested in accordance with 5.2.6.2, stops type B shall hold a load of ($12^{+0,2}_{0}$) kN. (deformation is acceptable)

4.3 Dynamic performance

4.3.1 Cold conditions test

The guided type fall arrester shall be conditioned in accordance with 5.3.2 at the coldest temperature claimed by the manufacturer and tested in accordance with article 5.3 of EN 353-1:2002. The rigid test mass shall be equivalent to the maximum rated load, with a tolerance on the mass of ($^{+2\%}_{0}$) kg and a minimum of 100 ($^{+2}_{0}$) kg. The mass shall be held clear of the ground and the arrest distance *H* shall not exceed 1 m.

4.3.2 Orientation of the rigid anchor line

Where the manufacturer claims that the rigid anchor line can be used at angles/deviations greater than 1° from the vertical, the guided type fall arrester shall be tested in accordance with 5.3.3. Individual tests shall be carried out for the backward angle, the sideways angle, and the combination of both, if both are permitted, up to the maximum angle as recommended by the manufacturer. The test mass shall be held clear of the ground and the vertical arrest distance *H* shall not exceed 1 m. The test mass shall be equivalent to the maximum rated load, with a minimum of 100 kg and a tolerance of ($^{+2\%}_{0}$) kg.

Note : limit the orientation test to vertical or at least to maximum angle(s) for which the EN 353-1:2002 requirement can be met (instruction for installation shall conform).

4.4 Dynamic strength on end stop type B

When tested in accordance with 5.4 with a test mass equivalent to the maximum rated load, with a tolerance on the mass of ($^{+2\%}_{0}$) kg, and a minimum of (100^{+2}_{0}) kg, the guided type fall arrester shall retain the test mass on the rigid anchor line.

4.5 Marking and information

Marking of the guided type fall arrester including a rigid anchor line shall be in accordance with clause 6.
Information shall be supplied with the guided type fall arrester including a rigid anchor line in accordance with clause 7.

5 Test methods

5.1 General examination of material and construction

5.1.1 Confirm by reference to appropriate documentation accompanying the guided type fall arrester including a rigid anchor line and by normal or corrected vision and/or tactile examination and/or by measurement of the guided type fall arrester including a rigid anchor line that they conform to 4.1.1, 4.1.2.2, 4.1.2.5, 4.1.2.7. If necessary to examine internal components, dismantle the component.

5.1.2 Install a specimen of rigid anchor line (including a joint if the anchorage line is a rail, intermediate bracket if applicable) and the guided type fall arrester to verify 4.1.2.1, 4.1.2.3, 4.1.2.4, 4.1.2.6.

5.2 Static test

5.2.1 Apparatus

The static strength test apparatus shall conform to 4.1 of EN 364:1992.

5.2.2 Guided type fall arrester including rigid anchor line

Install the specimen of rigid anchor line (including a joint if the anchorage line is a rail) and the guided type fall arrester in the test machine such that the test force is applied simultaneously to the rigid anchor line (and joint, if the rigid anchor line is a rail), and the guided type fall arrester. Submit these to the specified static test force in the direction of loading, in the event of a fall, for a period of $(3^{+0,25}_{0})$ min.

5.2.3 Non-metallic materials

Install the specimen in the test machine. Submit to the specified static test force in the direction of loading, in the event of a fall, for a period of $(3^{+0,25}_{0})$ min.

5.2.4 Wire rope systems where the dynamic load on the top anchor exceeds 6 kN

Install the specimen of rigid anchor line made from wire rope, including all other elements from the top of the anchor line, in the test machine such that the test force is applied simultaneously to the rigid anchor line and components. Submit these to the specified static test force for a period of $(3^{+0,25}_{0})$ min.

5.2.5 Lateral strength on the guided type fall arrester

For a rigid anchor line made from rail, position the guided type fall arrester between two structural anchors , at least 1 m from one of the structural anchors . Apply the test force to the attachment element of the guided type fall arrester in a orthogonal direction to the working axis in order to obtain the maximum torque moment and maintain the force for a period of (3 0/+0,25) min.

Repeat the test, with the guided type fall arrester positioned at a joint, if applicable.

Repeat the test, with the guided type fall arrester positioned at a structural anchor.

For a rigid anchor line made from wire rope, carry out the test at an intermediate bracket, if applicable.

Comment: it is suggested that side way static test is unuseful on wire rope as the guide type fall arrester would rotate

5.2.6 End stops

5.2.6.1 Method for end stops type A

Install the specimen of rigid anchor line including the end stop type A, and the guided type fall arrester in the test machine. Set the guided type fall arrester in the unlocked mode and position it below the end stop type A. Apply the specified static test force to the guided type fall arrester via its connecting element such that the force is also applied to the end stop type A for $(3^{+0,25}_{0})$ min.

5.2.6.2 Method for end stops type B

Install the specimen of rigid anchor line including the end stop type B, and the guided type fall arrester in the test machine. Set the guided type fall arrester on an initially unlocked mode and position it above the end stop type B. Apply the specified static test force to the guided type fall arrester via its connecting element such that the force is also applied to the end stop type B for $(3^{+0,25}_{0})$ min.

5.3 Dynamic performance tests

5.3.1 Apparatus

The test apparatus shall conform to 4.4, 4.5 and 4.6 of EN 364:1992.

5.3.2 Cold conditions test

Place the guided type fall arrester in a refrigerated chamber for $(2 \pm 0,1)$ h at a temperature in accordance with the coldest temperature claimed by the manufacturer $(^{0}_{-2})$ °C. Remove the guided type fall arrester from the refrigerated chamber and within 90 s attach it to the rigid anchor line and carry out the test according to 5.3 of EN 353-1:2002

5.3.3 Orientation of the rigid anchor line

- Secure the rigid anchor line at the maximum backwards angle from the vertical, in accordance with the information supplied by the manufacturer.
- Attach the guided type fall arrester by means of its connecting element to the test mass.
- Position the guided type fall arrester on the rigid anchor line at a maximum of 300 mm from the top anchor, but, where an intermediate anchor is fitted, mid-way between the top and the intermediate anchor.
- Hold the mass by the quick release device. Raise the mass above the guided type fall arrester to its maximum height and at the closest distance to the rigid anchor line.
- Let the mass fall without initial velocity. After the fall and with the mass at rest, measure the vertical displacement H of the point of attachment of the mass.
- Repeat the test 5.3.5.2 to 5.3.5.5 for the maximum sideways angle (± 1°) in accordance with the information supplied by the manufacturer.
- Repeat the test 5.3.5.2. to 5.3.5.5 for the maximum combination of the backwards and sideways angle (± 1°) in accordance with the information supplied by the manufacturer.

5.4 Dynamic strength on end stop type B

5.4.1 Apparatus

The test apparatus shall conform to 4.4, 4.5 and 4.6 of EN 364:1992.

5.4.2 End stop type B

- Install the specimen of rigid anchor line including the end stop type B, and the guided type fall arrester.
- Position the guided type fall arrester just above the end stop type B and set it in the unlocked mode.
- Attach the guided type fall arrester by means of its connecting element to the test mass.
- Raise the mass as far above the guided type fall arrester as the connecting element permits and at a maximum of 300 mm horizontally from the rigid anchor line. Hold the mass by the quick release device. Release the mass fall without initial velocity.

6 Marking

VG11 recommends that marking includes both EN 353-1:2002 and VG11 RfU11.073

Marking on the guided type fall arrester and the rigid anchor line shall conform to EN 365:2004 and in addition shall include the following:

a) Marking on the guided type fall arrester:
   - the maximum rated load;
   - if the guided type fall arrester can be removed from the rigid anchor line, an indication on the guided type fall arrester of the correct orientation in use and the model and type/identification marks of the appropriate rigid anchor line;

b) Marking on the rigid anchor line or adjacent to the rigid anchor line:
   - if the guided type fall arrester can be removed from the rigid anchor line, an indication about model and type/identification marks of the appropriate guided type fall arrester;
   - the maximum number of users and the minimum distance between each user.

7 Information supplied by the manufacturer

7.1 General

The information supplied by the manufacturer shall be provided in the languages of the country of destination. It shall conform to EN 365:2004.

7.2 Installation

In addition to conforming to EN 365:2004, the information supplied by the manufacturer shall include advice or information on installation as follows:

a) instructions for the installation of the rigid anchor line including the maximum angle of installation from the vertical;

b) that if the rigid anchor line is a wire rope it shall be anchored to the top and bottom of a structure and the rope shall be tightened to a minimum equivalent force of 0,8 kN;

c) that if the end stop has not been tested to clause 5.4, it shall be clearly stated that the bottom of the rigid rail can only be terminated where there is a no fall hazard;

d) additional information on the maximum load which will be applied to the anchorage, based on the result of the dynamic performance test of EN 353-1:2002

e) that all points of the rigid anchor line where the guided type fall arrester could unintentionally run off the rigid anchor line and there is or could be a fall hazard shall be fitted with an end stop.

7.3 Instructions for use

In addition to conforming to EN 365:2004, the information shall include advice or information on installation as follows:

a) the specific conditions under which the guided type fall arrester including a rigid anchor line may be used;

b) that the weight of the user, including clothing and equipment, shall not exceed the maximum rated load marked on the guided type fall arrester;

c) on how to connect the connecting element to a full body harness, including a clear statement on the required position of the harness attachment point, and that the harness attachment point should be at the position of the sternum i.e. a front attachment point; a warning that the full body harness should be properly adjusted to a snug fit and should not be used if loose;

d) a warning that the length of the connecting element shall not be extended or shortened, e.g. by adding or subtracting a connector;

e) if the guided type fall arrester can be removed from the rigid anchor line, that only the type and model of rigid anchor line and guided type fall arrester, as tested to this standard, shall be used;

f) the correct way of operating the guided type fall arrester on the rigid anchor line;

g) if the guided type fall arrester can be removed from the rigid anchor line, how to attach and detach it;

h) if a complete system is supplied, that components of any complete system shall not be substituted unless agreed by the manufacturer of the complete system;

i) advice that for the first two metres the user may not be protected against hitting the ground and that extra care should be taken when ascending or descending;

j) that for those systems which permit more than one user there should be a recommendation that there should be a minimum distance of 3 m between the feet of the upper person and the head of the lower person;

k) a warning that engaging the guided type fall arrester's release function or handling the guided type fall arrester during ascent or descent can hinder the safe operation of the braking mechanism;

l) advice that it is essential for the safety of the user that any engagement of the guided type fall arrester's release function or handling of the guided type fall arrester during ascent or descent is only carried out from a safe position where there is no risk of a fall;

m) that the guided type fall arrester shall not be used for work positioning and that if work positioning is required, a separate system shall be used;

n) the coldest temperature at which the guided type fall arrester including the rigid anchor line may be used.

8 Packaging

Packaging shall conform to EN 365:2004

ANNEX 2

Relevant requirements and test methods of CEN/TC160/WG2 N446

1- Dmin : Minimum distance dynamic test

1.1 Requirement

When tested in accordance with the maximum rated load test mass (and at least 100kg), the maximum arrest distance H1 shall be 1m and H2 shall be measured

with

H_1 : vertical displacement of the mass measured on the inner contact point between the lateral eyebolt and the connecting element of the fall arrester

H_2 locking distance to be measured on the rigid anchor line between initial and final position of the guided type fall arrester.

1.2 Test method

- Secure the rigid anchor line in accordance with the information supplied by the manufacturer and with a length that provides at least 2m of the rigid anchor line below the fall arrester's initial position, Rail systems shall be secured on the top against vertical movement .
- Attach the guided type fall arrester to the rigid anchor line in accordance with the information supplied by the manufacturers
- Attach the guided type fall arrester by means of its connecting element to the lateral eyebolt of the test mass according to article 4.5 of EN 364:1992 with a distance from the edge of 30mm +-5mm .
- Position the guided type fall arrester on the rigid anchor line at a maximum of 300 mm from the top anchor for wire systems or top fixing point for rail systems or, where an intermediate anchor is fitted, mid-way between the top and the intermediate anchor.
- Hold the central eyebolt of the rigid steel mass by the quick release device.
- Raise the mass vertically in the same plane as the rigid anchor line and the guided type fall arrester to its maximum height and at the closest distance to the rigid anchor line (the rigid steel mass might be in contact with the guided type fall arrester but shall not be above the guided type fall arrester), see figure 1.
- Let the mass fall without initial velocity. After the fall and with the mass at rest, measure the vertical displacement *H_1 and H_2*

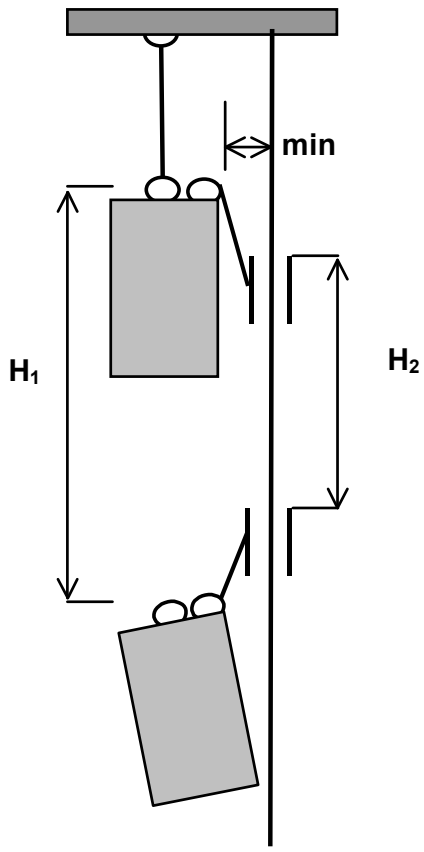

Figure 1

2- Dmax: Maximum distance dynamic test

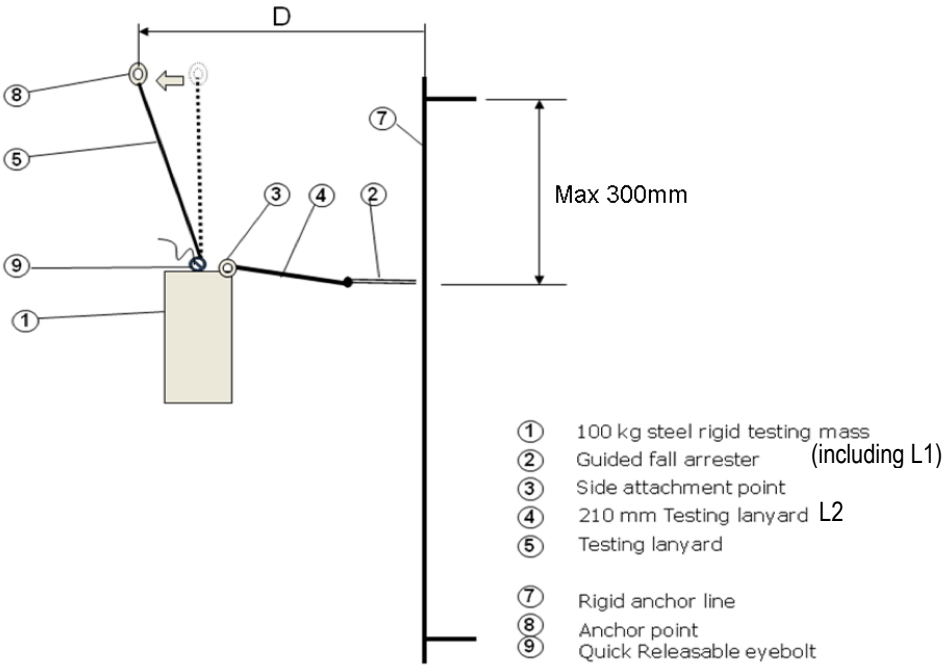

Figure 2: Maximum distance dynamic test

2.1 Requirement

When tested with the maximum rated load test mass (and at least 100kg) the arrest distance H shall not exceed $2L_1 + L_2 + 1m$ with

H : vertical displacement of the mass measured on the inner contact point between the lateral eyebolt and the connecting element of the fall arrester

L_1: length of the guided fall arrester lanyard

L_2 : additional test lanyard (to simulate flexibility of harness and body positioning). L_2= (210 +/- 5)mm. Use as many screwlink connectors (EN362 type Q) as necessary to achieve L_2

2.2 Test method

- Install the system in accordance with figure 2 with at least 2m of rigid anchor line below the fall arrester initial position
- Rail systems shall be secured on the top against vertical movement .
- Attach the guided type fall arrester to the rigid anchor line in accordance with the information supplied by the manufacturers
- Secure the rigid anchor line in accordance with the information supplied by the manufacturer.
- Connect the guided type fall arrester to the rigid anchor line
- Connect the 210mm test lanyard to the guided type fall arrester
- Connect the 210mm test lanyard to the offset eyebolt of the steel rigid mass.
- Position the guided type fall arrester on the rigid anchor line at a maximum of 300 mm from the top anchor, but, where an intermediate anchor is fitted, mid-way between the top and the intermediate anchor.
- Hold the mass by the quick release device from the centre eybold
- Move the rigid steel mass to its furthest distance away from the rigid anchor line. Whenever the guided type fall arrester can move freely (down) when applying a backward force, test it in an unlocked position. If necessary, increase the distance D until the guided type fall arrester becomes fully unlocked. If necessary lift the mass.
- Let the rigid steel mass fall. After the fall and with the mass at rest, measure the displacement H of the point of attachment of the mass.

3- FB: Fallback falls dynamic test

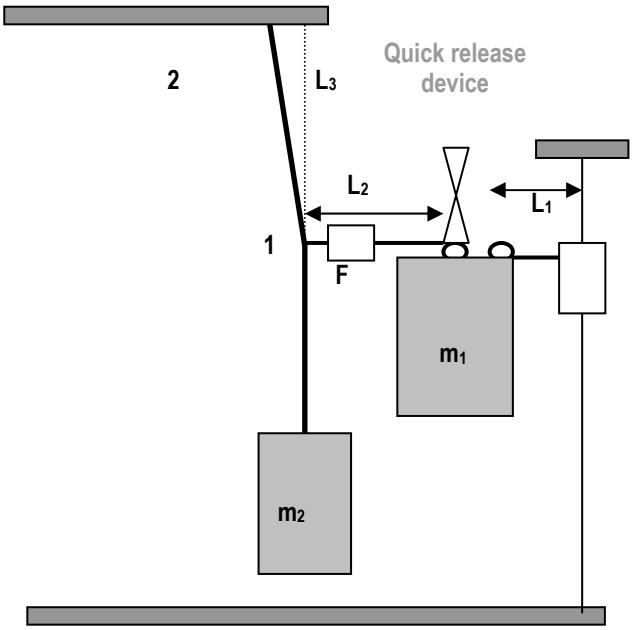

Legend

m_1 = maximum rated load
m_2 = 150 kg
L_1 = length of the connecting element of the guided fall arrester
L2 = (0,5 ± 0,1) m, rigid quick link including the load cell
F = (150 +/-20)N, initial tension (applied by moving attachment of m2)
L3 = length between the centre of the pulley and the upper attachment point of the lanyard of the mass m2. L3 = (3 000+/- 50)mm
1- Pulley to connect load cell (proposal: diameter less than 5cm)
2- Guiding test lanyard: wire rope 8mm 7x19 Galvanized

Figure 3: Fallback fall dynamic test

3.1 Requirement

When tested in accordance with the maximum rated load test mass (and at least 100kg), the maximum arrest distance H1 shall be 1m and H2 shall be measured

with

H_1 : vertical displacement of the mass measured on the inner contact point between the lateral eyebolt and the connecting element of the fall arrester

H_2 locking distance to be measured on the rigid anchor line between initial and final position of the guided type fall arrester.

3.2 Test method

See figure 3

Move m1 in such a way that L1 is horizontal until the guided type fall arrester is unlocked. If necessary, lift m1 until the guided type fall arrester unlocks.

Connect the load cell to the lanyard of m2 and move the guided test lanyard supporting m2 until the required force F is reached

Let the rigid steel mass fall. After the fall and with the mass at rest, measure the displacement H1 and H2 of the point of attachment of the rigid steel mass

4- SW: Sideway maximum distance dynamic test

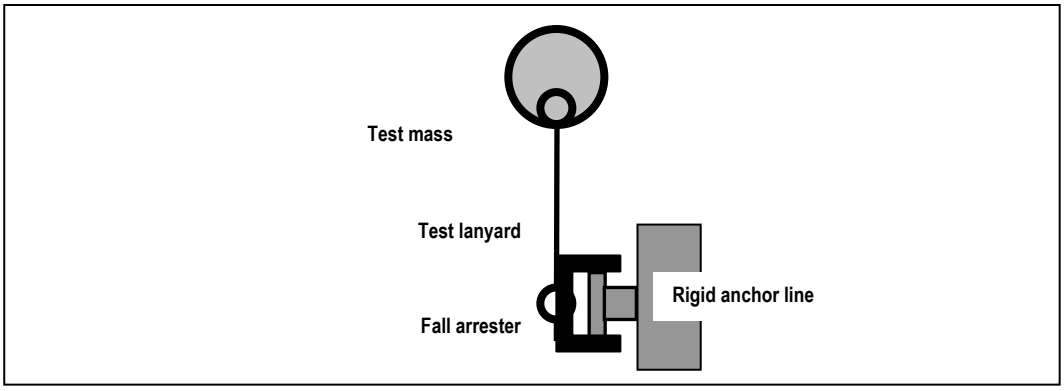

Figure 4: Sideway maximum distance dynamic test

4.1 Requirement
Same as “Maximum distance dynamic test”

4.2 Test method
Same as “Maximum distance dynamic test” except a lateral release of the test mass

Note 1: the guided type fall arrester shall be tested in unlocked position

Note 2: The sideways test does not need to be carried out on wire cable if the fall arrester can rotate freely on the rigid anchor line even when passing intermediate anchor (if existing).

Note 3: if the fall arrester is not vertically symmetrical, repeat the test on the other side

	CO-ORDINATION OF NOTIFIED BODIES **PPE-Directive 89/686/EEC + amendments** **RECOMMENDATION FOR USE**	CNB/P/11.077 Revision 01 Language: E

Number of pages : 1	Date : **12/10/2011**	Approval by :	Approved on :
Origin : VG11, Protection against falls from a height		☒ Vertical Group..... ☒ Horizontal Committee ..... ☒ Standing Committee	12/10/2011 08/10/2012 12/03/2013

Question related to : Directive 89/686/EC		EN/prEN : EN 795 + A1	Other :
Annex :	Article : 10	Clause :	

Key words : anchor device, class B, car

Question :

1/ Can a car be used as a transportable temporary anchor device class B?

2/ Can a PPE be attached to a car?

Solution:

1/ No a car is not a transportable temporary anchor device class B and so not a PPE.

2/ Yes a car can be used as structure with a PPE.
In that case, the part of the car used to connect the fall arrest system, but also the full car should be resistant to the expected load (requirement applicable: EN 795).

Information note: a specific temporary anchor device can be used to connect any kind of PPE fall arrester to the car. Instructions for use should take into account specificities and variability's of cars (attachment part, weight, orientation, brakes, engaged gear,...) and of course the risk to start the car during the PPE use...!

Sent for information to: ☒ members of the VG ☐ other(s) VG ☒ HC (2) ☒ TC (3) ☒ SC (4) ☐ other (5)

(3): (5):

(1) Essential safety requirement
(2) HC = horizontal committee
(3) N° of CEN/TC (Secretary & Chairman)
(4) EEC Standing Committee 89/392
(5) To be specified

	CO-ORDINATION OF NOTIFIED BODIES **PPE-Directive 89/686/EEC + amendments** **RECOMMENDATION FOR USE**	CNB/P/11.079 Revision 01 Language: E

Number of pages : 1	Date : **12/10/2011**	Approval by :	Approved on :
Origin : VG11, Protection against falls from a height		☒ Vertical Group..... ☒ Horizontal Committee ..... ☒ Standing Committee	12/10/2011 08/10/2012 12/03/2013

Question related to : Directive 89/686/EC		EN/prEN : : EN 360, EN 364	Other :
Annex :	Article : 10, 11A	Clause :	

Key words : dynamic performance

Question :

When the design of a retractable fall arrester includes a lanyard (e.g. energy absorber pack) or other element permanently extracted from the end of the block, how should the dynamic performance test be carried out?

Solution:

Because the goal of this dynamic performance test is to generate a 600mm free fall, the first sentence of the article 5.7.2.2 of EN 364:1992 shall be replaced by:

> "*Withdraw and fix the retractable lanyard in such a way that when the mass is raised to the same level as the bottom of the clip fitted to the retractable lanyard, it generates a 600mm free fall.*"

(see TC160/WG2 doc N477 12/01/11)

NOTE: Devices including a permanently connected element (meaning "a lanyard which is not detachable from the retractable lanyard of the fall arrester") longer than 600mm are not covered by either this VG11 sheet or EN 360.

Sent for information to: ☒ members of the VG ☐ other(s) VG ☒ HC (2) ☒ TC (3) ☒ SC (4) ☐ other (5)

(3): (5):

(1) Essential safety requirement
(2) HC = horizontal committee
(3) N° of CEN/TC (Secretary & Chairman)
(4) EEC Standing Committee 89/392
(5) To be specified

	CO-ORDINATION OF NOTIFIED BODIES **PPE-Directive 89/686/EEC + amendments** **RECOMMENDATION FOR USE**	CNB/P/11.080 Revision 01 Language: E

Number of pages : 1	Date : **12/10/2011**	Approval by :	Approved on :
Origin : VG11, Protection against falls from a height		☒ Vertical Group..... ☒ Horizontal Committee ..... ☒ Standing Committee	12/10/2011 08/10/2012 12/03/2013

Question related to : Directive 89/686/EC		EN/prEN : EN 353-2	Other :
Annex :	Article : 10	Clause :	

Key words : work positioning

Question :
Which requirements are recommended if a guided type fall arrester including a flexible anchor line is also intended to be use for work positioning (suspension)?

Solution:

In addition to EN 353-2, the product has to fulfill the requirements of EN 358 or EN 354, but if the intended adjustment is when the line is under tension, the product has to fulfill EN 12841 type B and/or C.

Instructions for use shall include the requirement to provide a back-up in use

Note: Regarding the incorrect attachment and use of a guided type fall arrester including a flexible anchor line see CNB/P/11.042.

Sent for information to: ☒ members of the VG ☐ other(s) VG ☒ HC (2) ☒ TC (3) ☒ SC (4) ☐ other (5)
(3): (5):

(1) Essential safety requirement
(2) HC = horizontal committee
(3) N° of CEN/TC (Secretary & Chairman)
(4) EEC Standing Committee 89/392
(5) To be specified

	CO-ORDINATION OF NOTIFIED BODIES **PPE-Directive 89/686/EEC + amendments** **RECOMMENDATION FOR USE**	CNB/P/11.081 Revision 01 Language: E

Number of pages : 1	Date : **12/10/2011**	Approval by :	Approved on :
Origin : VG11, Protection against falls from a height		☒ Vertical Group..... ☒ Horizontal Committee ..... ☒ Standing Committee	12/10/2011 08/10/2012 12/03/2013

Question related to : Directive 89/686/EC		EN/prEN : EN 353-2, EN 364	Other :
Annex :	Article : 10	Clause :	

Key words : guided type fall arrester, dynamic performance, non integral energy absorber

Question :

How to assess the dynamic performance of a EN 353-2 device that includes a non integral energy absorber?

Solution:

EN 353-2 device shall be tested in accordance with EN 364 5.5.2 or 5.8.2, with each energy absorber specified by the manufacturer in its instruction for use.

Sent for information to: ☒ members of the VG ☐ other(s) VG ☒ HC (2) ☒ TC (3) ☒ SC (4) ☐ other (5)

(3): (5):

(1) Essential safety requirement
(2) HC = horizontal committee
(3) N° of CEN/TC (Secretary & Chairman)
(4) EEC Standing Committee 89/392
(5) To be specified

	CO-ORDINATION OF NOTIFIED BODIES **PPE-Directive 89/686/EEC + amendments** **RECOMMENDATION FOR USE**	CNB/P/11.082 Revision 01 Language: E

Number of pages : 1	Date : **12/10/2011**	Approval by :	Approved on :
Origin : VG11, Protection against falls from a height		☒ Vertical Group..... ☒ Horizontal Committee ..... ☒ Standing Committee	12/10/2011 08/10/2012 12/03/2013

Question related to : Directive 89/686/EC		EN/prEN : EN 353-2, EN 364	Other :
Annex :	Article : 10	Clause :	

Key words : guided type fall arrester, dynamic performance, eyebolt

Question :

Which eyebolt has to be used to carry out dynamic performance test on EN 353-2?

Solution:

The offset eyebolt shall be used, as defined in EN 364 (articles 4.5 and 5.5 and in figure 2).

Sent for information to: ☒ members of the VG ☐ other(s) VG ☒ HC (2) ☒ TC (3) ☒ SC (4) ☐ other (5)

(3): (5):

(1) Essential safety requirement
(2) HC = horizontal committee
(3) N° of CEN/TC (Secretary & Chairman)
(4) EEC Standing Committee 89/392
(5) To be specified

	CO-ORDINATION OF NOTIFIED BODIES **PPE-Directive 89/686/EEC + amendments** **RECOMMENDATION FOR USE**	CNB/P/11.083 Revision 02 Language: E

Number of pages : 1	Date : **17/10/2012**	Approval by :	Approved on :
Origin : VG11, Protection against falls from a height		☒ Vertical Group..... ☒ Horizontal Committee ..... ☒ Standing Committee	17/10/2012 17/06/2013 19/09/2015

Question related to : Directive 89/686/EC		EN/prEN : EN 355	Other :
Annex :	Article : 10	Clause :	

Key words : samples, test order

Question :

Which sample shall be used to carry out the dynamic performance on EN 355:2002?

Solution:

The dynamic performance test shall be carried out on a new sample.

Sent for information to: ☒ members of the VG ☐ other(s) VG ☒ HC (2) ☒ TC (3) ☒ SC (4) ☐ other (5)

(3): (5):

(1) Essential safety requirement
(2) HC = horizontal committee
(3) N° of CEN/TC (Secretary & Chairman)
(4) EEC Standing Committee 89/392
(5) To be specified

	CO-ORDINATION OF NOTIFIED BODIES **PPE-Directive 89/686/EEC + amendments** **RECOMMENDATION FOR USE**	CNB/P/11.084 Revision 01 Language: E

Number of pages : 1	Date : **12/10/2011**	Approval by :	Approved on :
Origin : VG11, Protection against falls from a height		☒ Vertical Group ..... ☒ Horizontal Committee..... ☒ Standing Committee.....	12/10/2011 08/10/2012 12/03/2013

Question related to : Directive 89/686/EC		EN/prEN : EN 360, EN 364	Other :
Annex :	Article : 10	Clause : 5.1.2.3 (EN 360), 5.11.6.2 (EN 364)	

Key words : Retractable type fall arrester, locking test

Question :
Which level of load increasing is required by carry out the locking test in accordance with 5.11.6.2 of EN 364:1992?

Solution:

The minimum mass shall be 5kg but this can be increased by 1kg increments to that mass which operates the device up to a maximum of 30kg.

The test mass can be a rigid steel mass or a sand bag.

Sent for information to: ☒ members of the VG ☐ other(s) VG ☒ HC (2) ☒ TC (3) ☒ SC (4) ☐ other (5)

(1) Essential safety requirement
(2) HC = horizontal committee
(3) N° of CEN/TC (Secretary & Chairman)
(4) EEC Standing Committee 89/392
(5) To be specified

	CO-ORDINATION OF NOTIFIED BODIES **PPE-Directive 89/686/EEC + amendments** **RECOMMENDATION FOR USE**	CNB/P/11.085 Revision 02 Language: E

Number of pages : 1	Date : **17/10/2012**	Approval by :	Approved on :
Origin : VG11, Protection against falls from a height		☒ Vertical Group..... ☒ Horizontal Committee ..... ☒ Standing Committee	17/10/2012 17/06/2013 19/09/2015
Question related to : Directive 89/686/EC		EN/prEN : EN 360:2002	Other :
Annex :	Article : 10	Clause :	

Key words : retractable fall arrester, fall factor, locking feature

Question :

How to assess retractable fall arresters (EN 360 type) including a retraction locking feature which allow a fall factor of more than 0 or claiming the possibility to go above the device?

Solution:

EN 360 cannot be used 'alone' for assessment (as EN 360's use requires to stay below the device and under tension)

CE certificate can be awarded using EN 360 and following additional requirement:

1- Design requirement: the total length shall be limited to 2m
2- Dynamic performance test (with locked retraction feature if applicable), the maximum extracted length and a fall factor 2
   Requirement: F<6kN and H<2L+1,75m
3- Dynamic performance test (with locked retraction feature if applicable), half the maximum extracted length and fall factor 2 (to test the locking mechanism)
   Requirement: F<6kN and H<L+1,75m
4- Static strength test on the lanyard webbing only (a test specimen can be submitted by the applicant) - 22kN 3 minutes
5- Optional : edge test according to appropriate VG11 sheet
6- Instructions for use and marking according (clearance below the user, ...)

Sent for information to: ☒ members of the VG ☐ other(s) VG ☒ HC (2) ☒ TC (3) ☒ SC (4) ☐ other (5)

(3): (5):

(1) Essential safety requirement
(2) HC = horizontal committee
(3) N° of CEN/TC (Secretary & Chairman)
(4) EEC Standing Committee 89/392
(5) To be specified

	CO-ORDINATION OF NOTIFIED BODIES **PPE-Directive 89/686/EEC + amendments** **RECOMMENDATION FOR USE**	CNB/P/11.086 Revision 01 Language: E

Number of pages : 1	Date : **12/10/2011**	Approval by :	Approved on :
Origin : VG11, Protection against falls from a height		☒ Vertical Group..... ☒ Horizontal Committee ..... ☒ Standing Committee	12/10/2011 08/10/2012 12/03/2013

Question related to : Directive 89/686/EC		EN/prEN : EN 360	Other :
Annex :	Article : 10	Clause : art. 4.2 – para 3	

Key words : termination, connector

Question :

In the EN 360:2002, article 4.2, paragraph 3 “The external end of the retractable lanyard shall be suitably terminated”, what constitutes a “suitable” termination?

Solution:

The termination shall be deemed “suitable”, if either it incorporates a connector complying with EN 362, or, is of such design that an EN 362 connector can be fitted to the termination, without the need for any modification to the termination.

Sent for information to: ☒ members of the VG ☐ other(s) VG ☒ HC (2) ☒ TC (3) ☒ SC (4) ☐ other (5)

(3): (5):

(1) Essential safety requirement
(2) HC = horizontal committee
(3) N° of CEN/TC (Secretary & Chairman)
(4) EEC Standing Committee 89/392
(5) To be specified

	CO-ORDINATION OF NOTIFIED BODIES **PPE-Directive 89/686/EEC + amendments** **RECOMMENDATION FOR USE**	CNB/P/11.088 Revision 01 Language: E

Number of pages : 1	Date : **12/10/2011**	Approval by :	Approved on :
Origin : VG11, Protection against falls from a height		☒ Vertical Group ..... ☒ Horizontal Committee..... ☒ Standing Committee.....	12/10/2011 08/10/2012 12/03/2013

Question related to : Directive 89/686/EC		EN/prEN : EN 795+A1	Other :
Annex :	Article : 10	Clause :	

Key words : Rope / Knots tied by end user

Question :

Most fall protection systems require a certain element of installation (such as connecting various components) and therefore rely on subsequent training by the end user.

However if an anchor device or fall arrester relies on a knot that has to be tied (or dressed) in a special way by the end user to complete the product is this something that can be certified ?

Solution:

No, these devices are not suitable to be certified as they rely on techniques

Sent for information to: ☒ members of the VG ☐ other(s) VG ☒ HC (2) ☒ TC (3) ☒ SC (4) ☐ other (5)

(3): (5):

(1) Essential safety requirement
(2) HC = horizontal committee
(3) N° of CEN/TC (Secretary & Chairman)
(4) EEC Standing Committee 89/392
(5) To be specified

	CO-ORDINATION OF NOTIFIED BODIES **PPE-Directive 89/686/EEC + amendments** **RECOMMENDATION FOR USE**	CNB/P/11.089 Revision 01 Language: E

Number of pages : 1	Date : **12/10/2011**	Approval by :	Approved on :
Origin : VG11, Protection against falls from a height		☒ Vertical Group..... ☒ Horizontal Committee ..... ☒ Standing Committee	12/10/2011 08/10/2012 12/03/2012

Question related to : Directive 89/686/EC		EN/prEN : EN 361, EN 364	Other :
Annex :	Article : 10, 11A	Clause : 4.3 / 5.1.4	

Key words : harness, static strength

Question :

In EN 364: 1992 clause 5.1.4, static strength is required to be carried out both between the harness attachment element and the lower ring of the torso dummy (15 kN), and between the harness attachment element and the upper ring of the torso dummy (10 kN).

Can a new sample of EN 361 harness be used for each of these tests, or should both tests be carried out consecutively on the same sample?

Solution:

Each test may be carried out on a new sample of EN 361 harness

(see TC160/WG2 doc N477 12/01/11)

Sent for information to: ☒ members of the VG ☐ other(s) VG ☒ HC (2) ☒ TC (3) ☒ SC (4) ☐ other (5)

(3): (5):

(1) Essential safety requirement
(2) HC = horizontal committee
(3) N° of CEN/TC (Secretary & Chairman)
(4) EEC Standing Committee 89/392
(5) To be specified

	CO-ORDINATION OF NOTIFIED BODIES **PPE-Directive 89/686/EEC + amendments** **RECOMMENDATION FOR USE**	CNB/P/11.090 Revision 01 Language: E

Number of pages : 1	Date : **12/10/11**	Approval by :	Approved on :
Origin : VG11, Protection against falls from a height		☒ Vertical Group..... ☒ Horizontal Committee ..... ☒ Standing Committee	12/10/2011 08/10/2012 12/03/2013
Question related to : Directive 89/686/EC		EN/prEN : EN 362	Other :
Annex :	Article : 10	Clause :	

Key words : EN 362, latch distance from connector body

Question :

Point 4.4.1 of EN 362 standard says that "the gate locking feature shall withstand a force of (1 ± 0,02) kN without separating from the latch by more than 1 mm". Which is the correct interpretation?

Solution:

The distance of the part of the latch of less than 1 millimetre from the body of the connector must be considered as the distance of the latch teeth (picture 1) and not of the part of the latch which touches the body (picture 2).

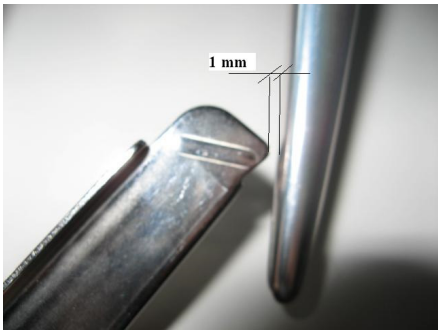

Picture 1: distance to consider

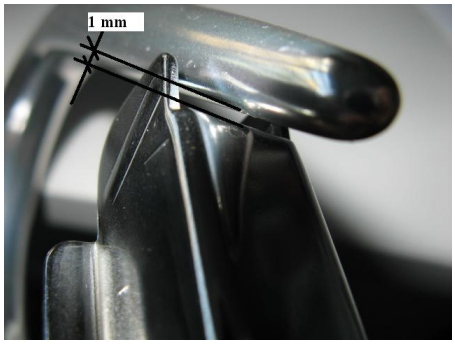

Picture 2: distance not to be considered

Sent for information to: ☒ members of the VG ☐ other(s) VG ☒ HC (2) ☒ TC (3) ☒ SC (4) ☐ other (5)

(3): (5):

(1) Essential safety requirement
(2) HC = horizontal committee
(3) N° of CEN/TC (Secretary & Chairman)
(4) EEC Standing Committee 89/392
(5) To be specified

	CO-ORDINATION OF NOTIFIED BODIES **PPE-Directive 89/686/EEC + amendments** **RECOMMENDATION FOR USE**	CNB/P/11.092 Revision 01 Language: E

Number of pages : 1	Date : **12/10/2011**	Approval by :	Approved on :
Origin : VG11, Protection against falls from a height		☒ Vertical Group..... ☒ Horizontal Committee ..... ☒ Standing Committee	12/10/2011 08/10/2012 12/03/2013

Question related to : Directive 89/686/EC		EN/prEN : EN 361, EN 12277	Other :
Annex :	Article : 10, 11A	Clause :	

Key words : harness, sizes, torso dummy

Question :

How shall be tested harnesses (like full body harnesses EN 361 or mountaineering harnesses EN 12277) with different sizes of the same design?

Solution:

The Notified Body shall test the size which fits the torso dummy

Note: the compliance of all sizes of a range is acceptable only if all sizes have the same materials, (tape, buckles, threads,…) same sewing, same dimensions (except tape length). Components with no influence on the safety of the harness can differ (number or size of gear loops, pad size...).

If a harness exists only on one size that does not fit the torso dummy, the applicant shall give a sample with same design but with a size which fits the torso dummy for testing

Sent for information to: ☒ members of the VG ☐ other(s) VG ☒ HC (2) ☒ TC (3) ☒ SC (4) ☐ other (5)

(3): (5):

(1) Essential safety requirement
(2) HC = horizontal committee
(3) N° of CEN/TC (Secretary & Chairman)
(4) EEC Standing Committee 89/392
(5) To be specified

	CO-ORDINATION OF NOTIFIED BODIES **PPE-Directive 89/686/EEC + amendments** **RECOMMENDATION FOR USE**	CNB/P/11.094 Revision 02 Language: E

Number of pages : 1	Date : **27/02/2013**	Approval by :	Approved on :
Origin : VG11, Protection against falls from a height		☒ Vertical Group..... ☒ Horizontal Committee ..... ☒ Standing Committee	27/02/2013 17/06/2013 19/09/2015
Question related to : Directive 89/686/EC		EN/prEN : EN 358 :1999 EN 354 :2010	Other :
Annex :	Article : 10	Clause :	

Key words : pole choker, work positioning lanyard

Question :

How should pole chokers (*) be assessed?

Solution:

Pole chokers have to be assessed as work positioning lanyard according to EN 358 or EN 354.

Dynamic resistance tests shall be carried out using a representative pole (at least minimum and maximum diameter)

Instructions for use shall require that the user needs a back-up system when using the pole choker devices

(*) Pole choker: double adjustable webbing lanyard designed to be used for climbing on wooden poles
Example of Pole Choker:

Sent for information to: ☒ members of the VG ☐ other(s) VG ☒ HC (2) ☒ TC (3) ☒ SC (4) ☐ other (5)

(3): (5):

(1) Essential safety requirement
(2) HC = horizontal committee
(3) N° of CEN/TC (Secretary & Chairman)
(4) EEC Standing Committee 89/392
(5) To be specified